Family Day Care Home Applicant Guide

Bright from the Start
Georgia Department of Early Care and Learning
2 Martin Luther King Jr. Drive SE, 670 East Tower
Atlanta, Georgia 30334
(404) 657-5562
www.decal.ga.gov

September 21, 2011

Bright from the Start
Georgia Department of Early Care and Learning
2 Martin Luther King Jr. Drive SE, 670 East Tower
Atlanta, Georgia 30334
(404) 657-5562

The Family Day Care Home Applicant Guide was prepared to assist you with registering to become a Family Day Care Home provider. The following steps should be followed to complete the application process:

1. Read the Rules and Regulations for Family Day Care Homes. Make sure you fully understand all rules and regulations, as you will be responsible for meeting all rules and regulations as a registered Family Day Care Home provider.

2. Read carefully and answer all questions listed on the "Rules Checklist" for Family Day Care Homes, page 19. This form must be completed and submitted with your application. It is also a tool to help you determine if you meet the majority of the rules. Please retain a copy of the Rules Checklist for your files. If there are rules you do not meet, you are to start taking action to correct these rules. All rules and regulations are not on the list. Therefore, it is imperative that you read the Family Day Care Homes Rules and Regulations thoroughly, as stated above in number 1.

3. Contact your local fire and zoning office to determine if there are local zoning ordinances that apply to operating a Family Day Care Home in your area or if a business license is required to operate a Family Day Care Home in your area.

4. After completing the above three items, please consider your ability to follow the rules and regulations for Family Day Care Homes. If you decide to apply to become a Family Day Care Home provider, you are agreeing to follow the laws that have been set into place by our legislature for the safety and well-being of children in the State of Georgia. If you decide to apply, please move to step 5.

5. Applicants must register with Cogent Systems, Inc., for fingerprint processing. Register online at www.ga.cogentid.com or by calling 1-888-439-2512. Only applicants must submit a notarized criminal records check application to Bright from the Start. Applicants must obtain local criminal records checks for all other adults at a local law enforcement agency and maintain them in their record in the home. Other adults are not required to submit to fingerprinting unless instructed by the agency. The local criminal records check must be processed under purpose code "W," at a local law enforcement agency.

6. Do not submit any payment with your application. The non-refundable $50 license fee will not be accepted until permission to operate (PTO) is granted during the initial licensing visit. At that time, payment instructions will be provided.

Thank you for your interest in becoming a Family Day Care Home provider. If you have any questions once you have reviewed the Family Day Care Applicant Guide, you may call (404) 657-5562 and ask for general intake. A consultant from our office will be happy to assist you.

Family Day Care Applicant Guide	Table of Contents

Section 1: Introduction	
Family Day Care Home Definition and Fact Sheet	1
Child Care Resource and Referral Agency Services	2
Operating a Family Day Care Home	3
Section 2: Application Procedures	
Steps to Complete and Submit a Family Day Care Home Registration Application	5
Registration Application	6
Affidavit for Verifying Status	7
Criminal Records Check Acknowledgement Form	8
Disclosure Form (Rule 290-2-3-.07)	9
Criminal Record Check Application Instructions	10
Criminal Record Check Application	11
Crimes and Convictions (that can Trigger Unsatisfactory Results)	12
Criminal Record Checks: Frequently Asked Questions	13
Section 3: Forms to Post or Keep on File	
Items Needed for Inspection	18
Family Day Care Home Rule Checklist	19-32
Emergency Telephone Numbers	33
Emergency Procedure Examples & Emergency Procedures Form	34-35
No Smoking Sign	36
Fire Drill Documentation Form	37
First Aid Kit	38
Injury/Illness Report	39
Authorization to Dispense Medication	40
Authorization to Dispense External Preparations	41
Medical Care and Emergency Contact Information	42
Infant Feeding Plan	43
Notice of No Liability Insurance & No Liability Acknowledgement	44-45
Parents You Have the Right Poster	46
Helper Orientation Checklist	47
Section 4: Important Information and Requirements	
Pets in the Home	48
Keeping Your Family Child Care Area Clean	49
Crib Requirements	50-52
Hanging Cords	53
Screens and Barriers for Heating Devices	54
Outdoor Areas	55-61
Supervision of Children	62
Hand Washing & Diapering Procedures	63-65
Toileting	66
Dishwashing	67
Encouraging Good Food Habits & Meal Guidelines for Children 0-12	68-71
Child Restraint Information Sheet (Georgia Safety Belt Laws)	72
Guidelines for Positive Discipline	73-74
Don’t Shake the Baby	75
Biting	76-78
Fire Extinguisher	79
Section 5: Resources	
Resource and Referral Directory	80-81
Food Sponsor Directory	82-84
Child Enrollment Form	85-88
Floor Plan Template	89

Family Day Care Home Definition and Fact Sheet

"Family Day Care Home" and "Home" are defined as a private residence operated by any person who received therein for pay for supervision and care fewer than 24 hours per day, without transfer of legal custody, three but not more than six children under 18 years of age who are not related to such persons and whose parents or guardians are not residents in the same private residence. 290-2-3-.03(h)

- A Family Day Care Home (FDCH) is permitted by law to care for three (3) to six (6) children for pay. The home that is issued a registration certificate must be in a residential zone and cannot be in a commercial facility.
- You may legally care for (2) children for pay until a certificate of registration has been issued from Bright from the Start.
- Please allow approximately 30 days for processing of your complete application, fingerprints, and pre-registration inspection.
- Upon approval of your application and initial licensing visit, you will receive permission to operate and may begin to care for 3 to 6 children for pay. You will then have 30 days from the permission-to-operate date to pay the annual license fee of $50. Once the license fee is paid, you will receive a certificate of registration by e-mail that you must print and post. Bright from the Start is the only issuer of Family Day Care Home registration certificates.
- Bright from the Start is responsible for monitoring all family day care homes to ensure compliance with the rules and regulations. All complaints received in reference to a Family Day Care Home must be investigated. All visits, whether initial registration, routine monitoring, technical assistance, or complaint investigations, may be unannounced. Your signature on the registration application form is your consent and understanding that Child Care Services staff may visit your home at any time during operating hours.
- You will be required to pay the non-refundable license fee of $50 by December 1st each year if you continue to provide care for children in your home. Bright from the Start will send e-mail notices to remind you of this requirement. A late fee will be added if you fail to pay the license fee by the due date. Failure to pay the annual license fee will result in revocation of the Family Day Care Home registration.
- During your approved registration period, if you voluntarily close you must notify Bright from the Start in writing immediately.
- Post Office or 911 Address Change: If your address has changed due to postal regulations or the new 911 emergency systems, you must submit proof of the address change, i.e., a copy of the 911 notices sent to you stating the address change. You can contact your local Post Office or the non-emergency 911 numbers for your county, and request a copy if you no longer have the one originally sent to you.
- E-mail Address Change: You must ensure that the e-mail address on file is current at all times. You will receive your registration certificate by e-mail and you are responsible for all information sent to you by e-mail.
- Moving/Transfer of Certificate: The certificate of registration is does not transfer from one address to another. The certificate of registration is only valid for the address printed on the certificate. You may request location change information by calling (404) 657-5562. Note: This process may require submission of new fingerprint results for the provider and new local criminal records checks for all adults in the home.
- Name Change: You must provide us with one of the following documents if your name has changed: a Marriage Certificate, Divorce Decree, Corrected Drivers' License, or corrected Social Security Card.
- Required Training: Family Day Care Home providers are required to obtain and maintain current Infant, Child and Adult (for children age 8 and above) Cardiopulmonary Resuscitation (CPR) and First Aid Training. Initial applicants are required to attend ROM (Registration Orientation Meeting) and to complete 10 additional hours of training in five specific areas: Early Learning Standards, Communications, Leadership and Professional Development, Business Management, and Advocacy for Parents and Children (2 hours in each).

Child Care Resource & Referral (CCR&R) Agencies

Mission: The primary goal of the Resource and Referral Agency is to increase the quality and availability of child care in Georgia. There are six Resource and Referral Agencies, each serving a region, throughout the state. The Resource and Referral Agencies serve Georgia's children and parents by providing a local source for information on child care and child development.

- Parent Referrals: Assist parents who are seeking child care.
- Lending Libraries and Resource Rooms: Children's books & puppets, videos, CD's, musical instruments, puzzles, manipulatives and other items are available for loan. The CCR&R's may also have laminators, bookbinders, copiers, shape/letter/number die cuts, computers, or other resources available for use at a nominal charge.
- Child Development Training: Training is available for child care providers, administrators, and parents.
- Technical Assistance: This service is provided for **free of charge** to child care providers. Technical assistance is provided in the form of consultation on room arrangement, curriculum ideas, and many other areas.
- Websites: Check with your local CCR&R, they may have an active website with links to newsletters, training calendars, useful forms for child care providers, and other child care resources.
- On-site Inclusion Coordinators: These coordinators are available to assist providers with adaptive strategies for children with special needs.

The Child Care Resource and Referral Agencies are funded by Bright from the Start: Georgia Department of Early Care and Learning through a federal child care development grant. The CCR&R's are associated with The National Association of Child Care Resource and Referral Agencies. To find out the name and phone number for your local Resource and Referral Agency, please see page 72 of this guide. You may also find this information at the Bright from the Start web site at http://www.decal.ga.gov/ChildCareServices/CCRRSystem.aspx

Operating a Family Day Care Home

As a beginning family day care provider, you want to be prepared to offer safe, quality care. Thoughtful preparation can make your home safer and your job easier. Consider the following:

…Be sure your family understands that changes will be inevitable, you will be a professional child care provider with up to six children spending the day in your home that require your attention and supervision.

…Decide the areas in your home that the children will be able to use and plan:

1. Places for children to store their personal belongings to include coats, bags, or items brought from home.
2. Areas for the children to have active play.
3. Storage for play equipment that is within the children's reach.
4. Comfortable and safe individual places for children to nap.
5. Comfortable eating arrangements.

…Make a safety check of your home and playground area and plan for:

1. Protection from stoves, fans and heating equipment.
2. Locked and out-of-reach storage of household cleaners, poisons, and medicines.
3. Protection from or for stairs, electrical outlets, extension cords, breakable items, and furniture that is unstable, heavy or has sharp corners.
4. Separation of children from area used for cooking.
5. An accessible playground area with a four-foot high fence or other approved barrier to protect from hazards and is free of trash, weeds, debris, holes, standing water, or other hazards.
6. An emergency plan to include fire safety and evacuation.
7. A neighbor to help in case of an emergency.
8. Posting of emergency telephone numbers.
9. Determining whether or not additional insurance protection is needed.

…Prepare a statement for parents, that describes the services and meals that will be offered, hours of operation, regulations, and charges (parental agreement or contract).

…Plan activities so that you will be free to devote your time to the children:

1. Develop nutritious menu plans that allow for a maximum amount of preparation ahead of time.
2. Develop a plan for the day so that children have comfortable routines that include supervised quiet and active indoor and outdoor play with age-appropriate activities.

…Set up a record system:

- Children's records
- Attendance records
- Income/Expense records (Including records of home use for business/Internal Revenue Service will allow a percentage deduction because of child care use)

…Obtain the basic supplies

1. First Aid Kit – homemade or purchased, that contains all of the required items.
2. Individual or disposable drinking cups & towels, washcloths and diapering supplies
3. Age-appropriate play materials and equipment.

…Become acquainted with the agencies that offer assistance to family day care providers:

- Bright from the Start: GA Department of Early Care and Learning – Registration and Consultation
  - http://www.decal.ga.gov/ChildCareServices/ChildCareServicesMain.aspx

- Child Care Resource and Referral Agencies – training and technical assistance for child care providers and parents
  - http://www.decal.ga.gov/ChildCareServices/CCRRSystem.aspx

- U.S. Department of Agriculture – Nutrition service through a local food umbrella agency
  - http://www.decal.ga.gov/Nutrition/NutritionServicesMain.aspx
  - http://www.fns.usda.gov/fns/

- County Extension Service – menus, recipes, low-cost equipment
  - http://www.caes.uga.edu/extension/

- Library – books, records, program materials, story hour
  - http://www.georgialibraries.org/directories/publiclibdir.php

- Public Health Center – assessments, immunizations
  - http://health.state.ga.us/regional/index.asp

- Small Business Association (SBA)
  - http://www.sba.gov/
  - http://www.georgiasbdc.org/index.aspx?page_name=sba_link

Steps to Complete and Submit a
Family Day Care Home Registration Application

The checklist below identifies all requirements and fees that must be provided for Bright from the Start to process your request to register as a Family Day Care Home.

- ☐ Registration Application Form – Applicant must complete and sign. You are required to include a current e-mail address.

- ☐ Educational Requirement - Rule 290-2-3.07(2) – Documentation of credentials/degrees. Please submit documentation of one of the following:
  - Child Development Associate credential (CDA) – issued by the Council for Professional Recognition;
  - Technical Certificate of Credit (TCC) in Early Childhood Education;
  - Technical College Diploma (TCC) in Early Childhood Education;
  - Associate Degree in Early Childhood Education;
  - Paraprofessional Certificate issued by the Georgia Professional Standards Commission;
  - Bachelor's Degree in Early Childhood Education;
  - Master's Degree in Early Childhood Education.

- ☐ Criminal Record Check Acknowledgement Form and Disclosure Form. Applicant must complete and sign both.

- ☐ Affidavit for Verifying Status Form. Applicant must complete, sign, and have notarized.

- ☐ Documentation of required pre-service training (20 hours total) to include proof of:
  *Please note all training must be completed within the past 12 months
  - Attendance at Registration Orientation Meeting (ROM). (6 hours credit) (for ROM schedule, go to http://www.decal.ga.gov/ChildCareServices/FamilyDayCare.aspx
  - Current CPR (Infant, Child, and Adult) & First Aid card--certificates for CPR unacceptable! Current verification must be provided to include the training source and contact telephone number. Online course are not acceptable! (4 hours credit)
  - Additional approved training courses. Online courses are acceptable. (10 hours credit).
    Contact your local Resource & Referral Agency or go to the link for the approved training system: https://www.training.decal.ga.gov/bfts/welcome.do
    - Early Learning Standards (2 hours)
    - Communications (2 hours)
    - Leadership & Professional Development (2 hours)
    - Business Management (2 hours)
    - Advocacy for Parents & Children (2 hours)

- ☐ Complete and submit the Family Day Care Home Rules and Regulations checklist.

- ☐ **Do not send with application.** Local Record Check – A local criminal record check must be obtained for each adult who is 18 years of age and resides in the home as well as any other adult who will routinely have access to children in care. The local record check must be processed under purpose code "W," at the local law enforcement agency. Identification as well as a fee may be required. A legible copy for each adult must kept for your records.

- ☐ Fingerprint Processing – The individual submitting the family day care home application is required to contact Cogent Systems to register for fingerprinting. The applicant may register online at www.ga.cogentid.com or by calling 1-888-439-2512. When registering, you will need the following information: Transaction Reason: Bright from the Start: Child Care/Family Day Care Home, ORI: GA922290Z, Verification code: 922290Z and the processing fee is $52.90.
  ****The applicant must submit a notarized criminal record check application with the registration application.****

- ☐ Prior to issuance of registration, a pre-registration on-site inspection will be conducted at your potential Family Day Care Home to assess compliance with the rules. Once permission to operate is granted an Inspection Master will be presented to you along with instructions for how and when to pay your $50 annual license fee. Your registration certificate will be sent to you by e-mail once the license fee payment is confirmed. **DO NOT SEND PAYMENT WITH YOUR REGISTRATION APPLICATION.**

Note: By signing the registration application, you are certifying that you have read and understand the rules and regulations for Family Day Care Homes chapter (290-2-3). You are certifying that you have assessed your home against the rules checklist and found it to be in compliance with the Family Day Care Home Rules and Regulations, Chapter 290-2-3. You certify that the information is true and correct to the best of your knowledge. You understand that any willful misrepresentation is cause for immediate denial or revocation of your registration. **Enclose all applicable items listed above in an envelope and mail to**:

Bright from the Start
Georgia Department of Early Care and Learning
2 Martin Luther King Jr. Drive SE, 670 East Tower
Atlanta, GA 30334

Bright from the Start: Georgia Department of Early Care and Learning

FAMILY DAY CARE HOME REGISTRATION APPLICATION Cogent System, Inc. Registration Confirmation #:_____	Please fill out form in its entirety **PRINT CLEARLY** **SPELL OUT** all requested information **SIGN and DATE**	**DO NOT WRITE IN THIS SPACE—OFFICE USE ONLY** CRC Clearance Date:_____ FPC Clearance Date: _____ Registration ID# _____

☐ Initial Registration ☐ Location Change ☐ Name Change | My Certificate Number is: FR-_____

Have you ever been registered at another address? ☐ NO ☐ YES (If YES, give previous address: _____

NAME (First) (M.I) (Last)	**SOCIAL SECURITY NUMBER** - -		**DATE OF BIRTH** / /	
CURRENT STREET ADDRESS (Street/Name of Road/Hwy Name/Apt. Complex)	**CITY**	**ZIP CODE**	**COUNTY**	**Area Code TELEPHONE #** ( )
CURRENT MAILING ADDRESS (If different from street address) **E-Mail Address (required)**	**Are you a military applicant/provider?** ☐ **NO** ☐ **YES**	**Educational requirement met?** ☐ **NO** ☐ **YES**	**Are you a FOSTER PARENT?** ☐ **NO** ☐ **YES**	**Are you an unregulated DFCS vendor?** ☐ **NO** ☐ **YES**
☐ **NO** ☐ **YES I care for 2 additional children who are 3 years and older for two (2) hours daily from _____ to _____.**	**COMPANY NAME of Child Care Food Program:**			

NAME OF OTHER ADULTS (AGE 18 OR OLDER) LIVING IN MY HOME OR WHO ARE PRESENT IN MY HOME WHILE CHILDREN ARE BEING CARED FOR. IF A LOCAL CRC HAS NOT BEEN SUBMITTED ON THIS ADULT, PLEASE MAKE SURE YOU HAVE ONE ON FILE. (see #6 below)			**LIST ALL CHILDREN IN YOUR HOME UNDER THE AGE OF THIRTEEN (13) (DO NOT LIST AGES 13-17 ON APPLICATION)**		
NAME	**SOCIAL SECURITY #**	**RELATIONSHIP**	**NAME**	**AGE**	**RELATIONSHIP**

I hereby request registration with Bright from the Start: Georgia Department of Early Care and Learning, Child Care Services Division, as a Family Day Care Home. In making this request, I understand:

1. That I must provide care for no more than six children for pay who are not members of my household, or related to me, except for two one-hour time periods designated above, when I may keep two additional children ages three years and older.
2. That staff from Bright from the Start: Georgia Department of Early Care and Learning (Bright from the Start) may inspect my home at any time children are present.
3. That to deny entrance and/or meaningful access to the home, all children present in my home, and all records required by the Rules and Regulations to any Bright from the Start consultants or to refuse to cooperate with a consultant or an investigation is grounds for automatic denial or revocation of my registration or imposition of any other sanction authorized by law
4. That I must meet the Family Day Care Home Rules and Regulations, Chapter 290-2-3, and correct any violation cited there under in accordance with a reasonable plan of improvement, or my registration may be denied or revoked or any other sanction authorized by law may be imposed.
5. That I must provide the parents of each child in my care with a copy of the "Parent Handbook."
6. That I must obtain a local Criminal Records Check on each adult residing in my home and on any adults who may be present when children are in care and maintain them in my records.
7. That this registration is valid only at the address on the application and is not transferable to another address or to another person.
8. I must receive and open all e-mails from the Department in order to receive proper notification of any waiver, correspondence, changes, or other notices from the Department.
9. If an adult listed on last year's application is no longer in the home, I must submit documentation to that effect.
10. I am required to pay a non-refundable license fee of $50.00 once permission to operate is granted for initial application and for each renewal year by Dec. 1st.

I HEREBY CERTIFY THAT I HAVE READ AND UNDERSTAND THE RULES AND REGULATIONS FOR FAMILY DAY CARE HOMES. I HEREBY CERTIFY THAT I HAVE ASSESSED MY FAMILY DAY CARE HOME AND FOUND IT TO BE IN COMPLIANCE WITH THE FAMILY DAY CARE HOME RULES AND REGULATIONS (290-2-3). I HEREBY CERTIFY THAT THIS INFORMATION IS TRUE AND CORRECT TO THE BEST OF MY KNOWLEDGE. I UNDERSTAND THAT ANY WILLFUL MISREPRESENTATION OF ANY OF THE ABOVE FACTS IS CAUSE FOR IMMEDIATE DENIAL OR REVOCATION OF MY REGISTRATION.

INCOMPLETE APPLICATIONS CANNOT BE PROCESSED

_____/_____

SIGNATURE DATE

SUBMISSION INSTRUCTIONS

If you are a first time registrant, the following material must be submitted in order to process your application:

1. *Your completed Registration Application.*
2. *Your completed Criminal Records Check Acknowledgement Form and Disclosure Form*
3. *A completed and notarized Criminal Records Check Application form for the Applicant after submitting to Livescan fingerprinting through Cogent Systems, Inc*
4. *Affidavit for Verifying Status Form. Applicants must complete, sign and have notarized.*
5. ***Do not send with application.*** *A local Criminal Records Check for other adults 18 years or older that live in your home. A local Criminal Records Check is also required for anyone who will be in your home while children are being cared for.*
6. *Documentation of Credentials/degrees. The applicant must possess one of the following: Child Development Credential (CDA) – issued by the Council for Professional Recognition; Technical Certificate of Credit (TCC) in Early Childhood Education; Technical College Diploma (TCD) in Early Childhood Education; Associate Degree in Early Childhood Education (AA, AAS, AAT); Paraprofessional Certificate issued by Georgia Professional Standards Commission; Bachelor's Degree in Early Childhood Education; or a Master's Degree in Early Childhood Education.*
7. *A copy of your current CPR (for Infant, Child & Adult) and First Aid Certification.*
8. *A copy of your Registration Orientation Meeting (ROM) Certificate.*
9. *Documentation/Certificates indicating that you have attended ten hours of state approved training. You are required to attend two hours training from each of the following categories: Early Learning Standards, Communications, Leadership & Professional Development, Business Management, Advocacy for Parents and Children.*
10. *The non-refundable license fee of $50 is due once Permission to Operate (PTO) is granted. A $25 late fee will be imposed if the payment is not received within 20 days.*

If you have moved, the following material must be submitted in order to process your application:

1. *Your completed Registration Application.*
2. *Your completed Criminal Records Check Acknowledgement Form and Disclosure Form*
3. *Affidavit for Verifying Status Form. Applicants must complete, sign and have notarized.*
4. ***Do not send with application.*** *A local Criminal Records Check for other adults 18 years or older that live in your home. A local criminal records check is also required for anyone who will be in your home while children are being cared for.*
5. *For Providers: If you have moved and your fingerprint results are more than 12 months old, you must be fingerprinted by Livescan fingerprinting through Cogent Systems, Inc., and submit a notarized criminal records check application.*
6. *If you have moved, and if the Criminal Records Checks for all other adults are more than 12 months old, you must send in new local criminal records checks for anyone 18 years or older that lives in your home or who will be in your home while children are in care.*
7. *If you have moved, please attach the original Certificate of Registration (not a photocopy) to the new registration application.*
8. *A non-refundable license fee of $50 is due when Permission to Operate is granted. A $25 late fee will be imposed if the payment is not received within 20 days.*

If you have a 911 Address change, please just submit a copy of the letter received from the county along with the Registration Application, Criminal Records Check Acknowledgment Form and Disclosure Form.

Bright from the Start
Georgia Department of Early Care and Learning
2 Martin Luther King Jr. Drive SE, 670 East Tower
Atlanta, GA 30334

If you continue caring for children and do not complete the above steps, you will be in violation of Georgia Law (O.C.G.A. 49-5 et.Seq.)

Affidavit Verifying Status for Family Day Care Home Registration Application

By executing this affidavit under oath, as an applicant for a Family Day Care Home Registration (License) or other public benefit as referenced in O.C.G.A. §50-36-1(3)(A), I am stating the following to be true and correct with respect to my application for a Family Day Care Home Registration (License) or other public benefit for _____ [Name of natural person applying on behalf of individual, business, corporation, partnership, or other private entity]

1) _____ I am a United States citizen

2) _____ I am a legal permanent resident 18 years of age or older or I am an otherwise qualified alien or non-immigrant under the Federal Immigration and Nationality Act 18 years of age or older and lawfully present in the United States. *

*_____

Alien Registration number for non-citizens

In making the above representation under oath, I understand that any person who knowingly and willfully makes a false, fictitious, or fraudulent statement or representation in an affidavit in any matter within the jurisdiction of any department or agency of state government shall be guilty of a felony in violation of O.C.G.A. §16-10-20. See O.C.G.A. §50-36-1(g).

Signature of Applicant: Date

_____ _____

Printed Name:

_____

SUBSCRIBED AND SWORN BEFORE ME ON THIS THE
_____DAY OF _____, 20___ Notary Public

My Commission Expires:*Note: O.C.G.A. § 50-36-1 (e)(2) requires that aliens under the federal Immigration and Nationality Act, Title 8 U.S.C., as amended, provide their alien registration number. Because legal permanent residents are included in the federal definition of "alien", legal permanent residents must also provide their alien registration number. Qualified aliens that do not have an alien registration number may supply another identifying number below:

Criminal Record Check Acknowledgment Form

O.C.G.A. §20-1A-30 prohibits persons who have committed certain crimes from living in or being employed in family day care homes, group day care homes, or child care learning centers. The crimes are:

- any felony (in the state of Georgia, or any other state);
- all sexual offenses found in chapter six (6) of title 16 ;
- certain misdemeanors including:
  A) simple battery, when the victim is a minor;
  B) contributing to the delinquency of a minor;
- criminal attempt to commit any of the above listed crimes in accordance with O.C.G.A. §16-4-1.

A person must have been convicted of or entered a plea of guilty or nolo contendere to or have been adjudicated for any of the above crimes. A person that has been arrested for any of the above crimes may not live or be employed in family day care homes, group day care homes, or child care learning centers until such time a court of proper jurisdiction dismisses the charges or a not guilty verdict is rendered.

O.C.G.A. §16-12-1.1(b)(c) makes it a misdemeanor for any operator of a facility to knowingly have any person reside at, be domiciled at, or be employed at any such facility if such person has been convicted of or has entered a plea of guilty or nolo contendere to or has been adjudicated a delinquent for certain offenses.

Bright from the Start: Georgia Department of Early Care and Learning may deny or revoke the license, commission, or registration of any facility in violation of these requirements.

To my knowledge, no person lives at or is employed at the child care facility listed below who has been convicted of, has entered a plea of guilty or nolo contendere to, or has been adjudicated delinquent for any of the above listed crimes.

_____ _____

Director's Signature **Date**

_____

Director's Name (print legibly)

_____

Name of Facility (print legibly)

_____

Address of Facility

_____

City, State, and Zip Code

This document will be maintained in the facility's State File.

Disclosure Form

Rule 290-2-3.07(5)

Please read and answer the questions and sign and date at the bottom of the page.

(a) Have you ever been shown by credible evidence, e.g., a court order or jury, a department investigation or other reliable evidence to have abused, neglected or deprived a child or adult or to have subject any person to serious injury as a result of intentional or grossly negligent misconduct?

Yes _____ No _____

If Yes, explain _____
_____
_____

(b) Do you suffer from any physical handicap or mental health disorder that would interfere with the ability to perform adequately the job duties of providing for the care and supervision of the children in care?

Yes _____ No _____

If Yes, explain _____
_____
_____

(c) Have you made any material false statements concerning qualifications and/or requirements either to the department or an employee?

Yes _____ No _____

If Yes, Explain _____
_____
_____

_____ _____

Signature Date

This document will be maintained in the facility's State File.

INSTRUCTIONS FOR COMPLETING CRIMINAL RECORDS CHECK APPLICATION

(Be sure to complete the fingerprinting process before sending in this application.)

Please use a blue or black ball point pen, press firmly, and PRINT legibly.

APPLICANT WILL COMPLETE THE FOLLOWING:

First, write your COGENT ID number at the top of the form in the space provided.

1. **Check the correct box that identifies the applicant.**
2. **Check the box for the type of child care facility.**
3. **Print your full name, including your MAIDEN name. DO NOT use initials if you have a given name.**
   Print your date of birth.
   Print your sex either: Male or Female.
   Print your race: Black, White, or Other.
   Print your Social Security Number.
   Print your place of birth: City or County, State and Country <u>if not</u> USA.
   Print your height.
   Print your weight.
   Print the color of your eyes: DO NOT abbreviate: Brown, Black, Grey, Blue, Green, Hazel
   Print the color of your hair: DO NOT abbreviate: Brown, Black, Grey, Red, Blonde, Bald, or Other.
   Print your home and cell telephone numbers with area code.
   Print your complete home address and complete mailing address, if different. If the same, write "SAME".

4. **ALL APPLICATIONS MUST BE NOTARIZED.**
   Read consent statement.
   Sign your name as you would on a bank check or business letter.
   Obtain Notary's signature, county, and commission expiration date.

DIRECTOR WILL COMPLETE THE FOLLOWING:

5. **Record check results will be mailed to the address that is entered here.**
   Print clearly and give complete mailing address.

   Print the name of your center as it appears on your license application.
   Print the county.
   Print the mailing address of your center.
   Print the city/state/zip.

6. **Director must sign his/her name as it would appear on a bank check or business letter.**
   Print your name below your signature.
   Print date signed.
   Print center's telephone number.

7. **Submit the completed form to:**

BRIGHT FROM THE START
GEORGIA DEPARTMENT OF EARLY CARE AND LEARNING
2 Martin Luther King Jr. Drive, SE, Suite 754, East Tower
Atlanta, Georgia 30334

BRIGHT FROM THE START
Georgia Department of Early Care and Learning
CRIMINAL RECORD CHECK APPLICATION FOR CHILD CARE FACILITIES

TO BE COMPLETED BY APPLICANT: COGENT Registration ID:_____
(Please read instructions on back before completing this application.)

1. APPLICANT TYPE: ☐ **Director/Owner** (check one) ☐ **Potential Employee** ☐ **Non-employee**

2. FACILITY TYPE: ☐ **Group Day Care Home** ☐ **Family Day Care Home** ☐ **Child Care Learning Center** ☐ **Pre-K Program**

IS THIS A NEW CENTER/FACILITY? ☐ **YES** ☐ **NO**

3. PRINT FULL NAME: _____ _____
(LAST FIRST MIDDLE MAIDEN) (DATE OF BIRTH)

_____ _____ _____ _____
(SEX) (RACE) (SOCIAL SECURITY NUMBER) (PLACE OF BIRTH)

_____ _____ _____ _____ _(_____)_____
(HEIGHT) (WEIGHT) (EYES) (HAIR) (HOME TELEPHONE NUMBER)

__(_____)_____ _____
(CELL PHONE NUMBER) (PERSONAL E-MAIL ADDRESS)

_____
(HOME ADDRESS: STREET CITY STATE ZIP)

_____
(MAILING ADDRESS: STREET/P.O. BOX CITY STATE ZIP)

4. I hereby authorize the Bright from the Start: Georgia Department of Early Care and Learning and my potential employer named below to receive any criminal history record information pertaining to me which may be in the files of any state or local criminal justice agency in Georgia. As required by Law, I have attached an affidavit disclosing the nature and date of any arrest, charge, conviction for the violation of any law in any state, except for motor vehicle parking violations.

_____ _____
(NOTARY) (APPLICANT'S SIGNATURE)

5. TO BE COMPLETED BY DIRECTOR:

_____ _____ _____
(NAME OF CENTER) DATE (COUNTY)

_____ _____
(FACILITY STREET ADDRESS) (CITY, STATE, ZIP)

_____ _____
(MAILING ADDRESS) (CITY, STATE, ZIP)

6. My signature indicates that I am the Director and that I have verified the above information on the applicant.

_____ _____ _____
(DIRECTOR'S SIGNATURE) (DATE) (TELEPHONE NUMBER OF CENTER)

MAIL TO:
BRIGHT FROM THE START
GEORGIA DEPARTMENT OF EARLY CARE AND LEARNING
2 Martin Luther King Jr. Drive, SE, Suite 754, East Tower
Atlanta, Georgia 30334
(404) 656-5957
(SEE INSTRUCTIONS ON BACK OF FORM)

Revised 6/28/11

Crimes and Convictions

This is a listing of crimes and convictions that could result in unsatisfactory criminal record check results *(child care facilities only)

CRIMES AND OFFENSES

1. CRIMES AGAINST A CHILD
   a. Simple Battery (when the victim is a minor) (16-5-34)
   b. Simple Assault (when the victim is a minor)
   c. Battery (when the victim is a minor)
   d. Aggravated Assault (when the victim is a minor)
   e. Cruelty to Children (16-5-70)
   f. Aggravated Battery (when the victim is a child)
   g. Contributing to the Delinquency of a Minor, deprivation, unruliness of a minor
   h. Reckless Abandonment (16-5-72)
   i. Sexual Exploitation of Children
   j. Selling, Showing, etc, of Lewd, Indecent, etc. Materials to Minors
   k. Any crime sexual or violent crime, which involves a child

2. SEXUAL OFFENSES
   a. Rape (16-6-1)
   b. Sodomy/Aggravated Sodomy (16-6-2)
   c. Statutory Rape (16-6-3)
   d. Child molestation/Aggravated Child Molestation (16-6-4)
   e. Enticing a Child for Indecent Purpose (16-6-5)
   f. Sexual Assault Against a Person in Custody (16-6-5.1)
   g. Bestiality (16-6-6)
   h. Necrophilia (16-6-7)
   i. Public Indecency (16-6-8)
   j. Prostitution (16-6-9)
   k. Keeping a Place of Prostitution (16-6-10)
   l. Pimping (16-6-11)
   m. Pandering (16-6-12)
   n. Pimping (16-6-13.3)
   o. Pandering (16-6-14)
   p. Solicitation of Sodomy (16-6-15)
   q. Masturbation for hire (16-6-16)
   r. Giving massages in place used for Lewdness, Prostitution, Etc. (16-6-17)
   s. Adultery (16-6-19)
   t. Incest (16-6-22)
   u. Sexual Battery (16-6-22.1)
   v. Aggravated Sexual Battery (16-6-22.2)
   w. Fornication

Please keep this list for your reference.

Criminal Record Checks: Frequently Asked Questions

for Licensed and Registered Child Care Facilities

GENERAL INFORMATION

1) What is a criminal record check (CRC) and who has to have one?

A criminal record check is a list of a person's criminal history. The type of criminal record check completed will depend on the status of the person as an *employee, potential employee, or family member* who either reside at the facility, perform duties for the facility and/or have personal contact with the children in the facility.

Local Criminal Record Check: A local CRC is completed through the law enforcement agency (Sheriff or Police Department) in your community for the purpose of child care, identified as purpose code "W". For a small fee, the Sheriff or Police Department will run the criminal record check application, which consists of the applicant's name and social security number, through the Georgia Crime Information Center (GCIC) database to determine if a crime has been committed in the State of Georgia. This process applies to:

- Spouse, helper/assistants, adult residents (18 & over), and adult persons performing duties or having contact with the children in care.

Fingerprint Criminal Record Check: The director or provider must have a satisfactory fingerprint CRC. Fingerprint Processing – The individual submitting the application is required to contact Cogent Systems to register for electronic fingerprinting. Applicant may register online at www.ga.cogentid.com or by calling 1-888-439-2512. They will need to have the following information when registering: ORI number is GA 922290Z, Verification Code is 922290Z, and the processing fee is $52.90. Then the applicant will go to a Cogent Livescan location to submit electronic fingerprints. Applicants must also submit a signed and notarized criminal record check application to Bright from the Start with the application for license or registration.

- Director, FDCH provider, on-site manager, and anyone from the local CRC list above who has a charge that is listed on the Crime and Conviction List on page 11 or has a listing of Multi-source Offender on their CRC results.

2) What if the provider or other staff and family members have already had a CRC done?

If you are changing the location of your registered Family Day Care Home and are pursuing a registration at a new address or you are a brand new provider, you will have to have *current* copies of CRCs on file on the date of your Initial Licensing Study conducted by the Department. Current is defined as less than 1 year old. What this means is that fingerprint results on the Director and all local CRC results on family members/helpers, etc. have to be dated within the last year at the time of your visit for them to be valid. If they need to be redone – you will need to follow the process listed above in (1) to get those up to date.

3) What is a multi-source offender?

A multi-source offender is a person who may have charges on record in other states or countries. You cannot hire someone with a "multi-source offender status" without having that individual first submit a fingerprint criminal record check following the procedures described above. You must review the printout of the criminal history record for the **"Interstate Identification Index"** to determine if the applicant is a multi-source offender.

4) What am I required to send in to Bright from the Start to have a fingerprint CRC completed?

To have a fingerprint CRC completed, follow the procedures in number 1 above, Fingerprint Criminal Record Check. A fingerprint CRC must be completed for the director, FDCH provider, on-site manager, and anyone required to have a local CRC who has a charge that is listed on the Crime and Conviction List on page 11 or has a listing of Multi-source Offender on their CRC results.

5) What am I required to send in to Bright from the Start to have a local CRC completed?

Nothing. Local CRC's will be completed through your local Sheriff or Police Department. Once you have the report, you are responsible for reviewing it to determine if it is satisfactory. Have a local CRC completed for each adult through your local law enforcement agency and keep the results on file for each person. The consultant will look at the CRC results during each visit.

6) Can I begin working or hire a staff person before our criminal record checks have been completed?

A director or on-site manager may not work until the satisfactory state fingerprint records check determination is received from Bright from the Start.

What if it is an emergency?
Potential employees and adult residents must have a local record check completed by a local law enforcement agency. If there is an urgent need for an emergency temporary employee to work at a center/home in order to avoid immediate noncompliance with staffing requirements, the center may use the applicant as an emergency, temporary employee **after** applying for the preliminary records check through the local law enforcement agency. The director must then complete an affidavit, with all supporting documentation attached, stating:
"The GCIC/NCIC information has been requested through an identified local law enforcement agency and the results were not immediately available to the center/home prior to assigning the employee to work with children and the employee is needed in order to avoid immediate noncompliance with staffing ratios."
The director must maintain the affidavit and supporting documentation in the employee file for the individual, available to Bright from the Start for inspection. The person may not work on an emergency basis in the facility without a satisfactory CRC determination for more than three days.
The results of this preliminary record check must be received and determined to be satisfactory for the person to be permitted to work on an ongoing basis in a licensed or registered child care facility or home.

7) A director/provider wants to hire an employee on an emergency basis and obtains a local CRC through a local law enforcement agency. Who is responsible for determining whether the potential employee has a criminal record?
It is the responsibility of the director or owner of the child care facility or their designee to review the local CRC obtained from local law enforcement and determine whether the potential employee has a criminal record under the child care licensing/registration laws. If the potential employee has a crime listed that is on the Covered Crimes on page 12, the director, owner, or designee will have to take the steps in number 1 – Fingerprint Criminal Record Check. The person may not live or work in a licensed child care facility or registered home where the person will have contact with the children until it is determined that the charge has been dismissed or a hearing has been held and the person is permitted to work despite having the criminal record.

8) When would a potential employee send in a request for a CRC to Bright from the Start?
The potential employee will only send a request for a CRC to Bright from the Start when the director/provider has determined that their local CRC lists crimes or charges that are on the covered crimes (page 12. If the director/provider is still considering hire, the potential employee would submit electronic fingerprints according to the procedures in #1 – Fingerprint Criminal Record Check. The potential employee must also send in a completed, signed, and notarized criminal record check application to Bright from the Start.

9) How long is a Satisfactory Criminal Records Determination good for?
A satisfactory criminal records check is good for 12 months. If you move to another employer within the 12 months, you normally would not have to have your criminal record check completed again. You should have a copy of your satisfactory letter for the new employer. If you stay with the same employer the whole time, you normally do not have to get another criminal record check done, unless requested because of a questioned identity, abuse investigation, arrest warrant, etc.

READING A CRIMINAL HISTORY RECORD

10) What are covered crimes?
The crimes that are listed in law are referred to by us as "covered crimes." If the applicant has been arrested, charged or convicted of one of the listed "covered crimes," then that person's criminal record is determined to be unsatisfactory. Covered crimes, as outlined in O.C.G.A. Sec. 20-1A-30 are crimes that will prevent an applicant from being employed in a licensed facility or home. The list of the covered crimes is on page 12.

11) At what age does an arrest go on my criminal history record?
Any arrest or fingerprintable offense committed after the age of 18 will show up on a CRC, unless the arrest record is expunged or sealed by the court. In some instances, arrests for persons under the age of 18 will appear on the CRC if the person was charged as an adult.

12) How long do an arrest and conviction stay on my criminal history?
An arrest and/or conviction can stay on your criminal history indefinitely. You will have to contact the law enforcement agencies/courts in the areas that the charge was made to request removal.

13) What should I look for if I am reading a criminal history record?
The following chart list common words/acronyms you may see on a CRC:

Common Abbreviations	MISD-Misdemeanor FEL-Felony TXT-Theft by Taking VGCSA-Violation of Georgia's Controlled Substance Act SID-State Identification Number
Common Definitions	ACQUITTAL-A verdict of not guilty ADJUDICATE-To give judgment; to render or award judgment CONVICTIONS-An adjudication that a person is guilty of a crime based upon a verdict. DISMISSAL-To discontinue; to order a cause, motion, or prosecution to be discontinued, quashed, or dismissed as finally adjudicated against the plaintiff. FELONY-A serious offense, which, in Georgia, carries a sentence of 1 year or more. MULTI-SOURCE OFFENDER- The person may have been arrested for a crime in another state.
Common Dispositions You May See On A Criminal History	DISM-Dismissed/Dismissal NPGJ-Not Presented to the Grand Jury-Treat as a dismissal NFAA-No Further Action Anticipated-Treat as a dismissal NO BILL-Treat as a dismissal NOLO CONTENDERE-Treat as a conviction NOLLE PROSEQUI/NOLLE PROSSED-Treat as a dismissal NOT GUILTY FIRST OFFENDER-Treat as a conviction unless it shows that there was a successful completion of the program.

14) Who do I call if I have a questions concerning reading a criminal history record?
You should call the Criminal Record Check Unit at Bright from the Start or your local Child Care Services Consultant at (404) 657-5562 or (888) 442-7735. Ask for the consultant on intake and he or she will be able to provide you with your area's consultant and contact information or the necessary guidance or information you will need to get your questions answered.

15) If an applicant has a covered crime and the local CRC does not show that the charge was dismissed but the applicant tells me it was, what must I do?
To be sure that the crime has been dismissed, the applicant must get a copy of the court record showing the charge was dismissed. If the charge was dismissed, then you are free to hire the applicant. Make sure you attach the court information to the criminal history record and keep it on file. If you are submitting the record to Bright from the Start for review, the court records must be certified copies, i.e. the copies must be official copies obtained from the court and have the clerk of court's stamp on the records certifying them to be true and correct copies.

16) If I have submitted court information concerning an arrest and have previously received a clearance to work in a licensed center or home, do I have to resubmit that information each time I apply to work in a licensed facility?
Yes, each time you submit a criminal records check application to Bright from the Start you should attach a signed affidavit as outlined on the criminal records check application or certified copies of any and all arrests and dismissals that you know of. This will aid in speeding up the process of your criminal records check application.

17) Can Bright from the Start remove information from my criminal history record once I have shown that the charge was dismissed?
No, Bright from the Start cannot take anything off your criminal history record. Bright from the Start can only access the information that is on your criminal history record. Only the GBI under certain circumstances with information received from the courts can take any of the information off the GCIC criminal history record where good cause is shown. You must contact the arresting law enforcement agency to obtain an application for Local Record Expungement.

18) How can I get information updated on my criminal history record?
If you want to get your criminal history record updated, you should go back to the court where you were originally charged and ask them to assist you in getting your GCIC record updated to reflect the current status of your case.

19) Where do I get a criminal record check application?
You will find the criminal record check application on the Bright from the Start web site at
http://www.decal.ga.gov/ChildCareServices/CriminalRecordsCheck.aspx

20) How long does it currently take Bright from the Start to process a fingerprint CRC for a director or provider?
You should allow 7 to 10 business days for the routine satisfactory fingerprint CRC to be processed and the letter to be issued. It may take longer if there are unique circumstances associated with the application, e.g. there is a covered crime listed but it is only an arrest and we are trying to determine whether the charge was dismissed, fingerprint cards are required.

21) What is an affidavit, where do I get one, and does it have to be notarized?
An affidavit is a signed statement in writing that is made under oath or affirmation before a person legally authorized to administer an oath or affirmation, for example a notary. A potential employee must submit the CRC application with an affidavit explaining any convictions for crimes, etc. In lieu of an affidavit, certified copies of court records can be accepted.

FINGERPRINTS

22) Can I use fingerprint results from a former employer, such as the military or a school?
No. Fingerprints are run using different codes for different types of employment. Applicant's fingerprints must be submitted through the Cogent Live Scan process using the required routing numbers and verification codes for Bright from the Start.

23) As a director coming from another center or home do I have to submit fingerprints again?
If it has been less than a year since you received a satisfactory fingerprint check determination from Bright from the Start, you do not have to submit your fingerprints again as long as you can show proof of the satisfactory determination. If it has been more than a year since your last fingerprint check and you change jobs, you will have to submit your fingerprints again, using the Cogent Livescan process described in #1.

APPEAL/HEARING PROCESS

24) If I get an unsatisfactory determination what do I do? Or whom do I call?
If you receive an unsatisfactory determination, you will receive a letter from Bright from the Start, which lists the covered crimes that are causing you to receive an unsatisfactory criminal record check. You can appeal the unsatisfactory determination either because you were not convicted of the crimes that we show or because you believe that despite having been convicted of the crimes, you should still be allowed to work in a licensed child care facility or home. The letter explains how to request a hearing if you desire. General questions should be directed to Child Care Services at (404) 657-5562.

25) If I appeal the unsatisfactory determination, can I continue to work while waiting for the hearing?
No. Bright from the Start has no authority under the law to allow you to continue working while you are waiting for your hearing. It is a misdemeanor for a child care center or home to allow an employee with a "covered crime" to continue working and having any contact with the children while waiting for the hearing. Continuing to employ a person with an unsatisfactory criminal record check may result in the imposition of a sanction (for example, An enforcement fine) by Bright from the Start against the licensed child care center or home.

26) How long does it take to get a hearing and a decision? Is there any way to speed the process up?
The length of time varies considerably. You should plan on at least 4 months and possibly longer. You can speed up the process by getting certified copies of the court records on the crimes you were charged with and that are the subject of the hearing. If you get certified copies yourself and submit them to Bright from the Start, we can make the request to get the hearing scheduled sooner. If Bright from the Start requests the certified court records in writing, it can take a long time to get the court records back. Bright from the Start does not process your request for a hearing until the certified court records are received. Bright from the Start will notify you in writing when your hearing request has been sent to the Office of State Administrative Hearings.

27) Who actually schedules the hearings and how do I know when it has been scheduled? The hearing is actually scheduled by the Office of State Administrative Hearings once they receive all the required records from us. The Office of State Administrative Hearings is a separate state agency. We have no control over when they schedule hearings. After you receive a copy of the letter from Bright from the Start stating the hearing request has been processed, the Office of State Administrative Hearings will schedule the hearing and send you notice of the hearing date in writing. Questions concerning the scheduling of the hearing may be directed to the Office of State Administrative Hearings at (404) 657-2800.

COVERED CRIMES

This is a listing of crimes and convictions that could result in unsatisfactory criminal record check results *(child care facilities only)

This extract from O.C.G.A. Sec. 20-1A-30 defines crimes:

20-1A-30. As used in this article, the term:
(1) „Center‟ means a day-care center, group day-care home, family daycare home, or child care learning center, which is required to be licensed or registered under Article 1 of this chapter.

(2) „Conviction‟ means a finding or verdict of guilty or a plea of guilty regardless of whether an appeal of the conviction has been sought.

(3) „Crime‟ means any felony; a violation of Code Section 16-5-23, relating to simple battery, when the victim is a minor; a violation of Code Section 16-12-1, relating to contributing to the delinquency of a minor; a violation of Chapter 6 of Title 16, relating to sexual offenses; a violation of Code Section 16-4-1, relating to criminal attempt when the crime attempted is any of the crimes specified by this paragraph; or any other offenses committed in another jurisdiction which, if committed in this state, would be one of the enumerated crimes listed in this paragraph.

(4) „Criminal record‟ means:

(A) Conviction of a crime;

(B) Arrest, charge, and sentencing for a crime where:

(i) A plea of nolo contendere was entered to the charge;

(ii) First offender treatment without adjudication of guilt pursuant to the charge was granted; provided, however, that this division shall not apply to a violation of Chapter 13 of Title 16, relating to controlled substances, or any other offense committed in another jurisdiction which, if it were committed in this state, would be a violation of Chapter 13 of Title 16 if such violation or offense constituted only simple possession; or

(iii) Adjudication or sentence was otherwise withheld or not entered on the charge; provided, however, that this division shall not apply to a violation of Chapter 13 of Title 16, relating to controlled substances, or any other offense committed in another jurisdiction which, if it were committed in this state, would be a violation of Chapter 13 of Title 16 if such violation or offense constituted only simple possession; or

(C) Arrest and being charged for a crime if the charge is pending, unless the time for prosecuting such crime has expired pursuant to Chapter 3 of Title 17.

Items Needed for Inspection

The pages found in this section are forms that Bright from the Start requires you to post or have available during your Family Day Care Home hours of operation. The first form, the Family Day Care Home (FDCH) Rules Checklist is for your own personal review. Use it as a tool to see where you stand regarding the Bright from the Start Family Day Care Home Rules and Regulations, Chapter 290-2-3, before and after you apply to become a provider. Please remember that the FDCH Checklist does not cover all of the rules and regulations. You are responsible for reading the Family Day Care Home Rules & Regulations and maintaining compliance with each rule and regulation. The rules and regulations can be found at http://www.decal.ga.gov/ChildCareServices/RulesAndRegulations.aspx.

Following the FDCH Checklist are forms that Bright from the Start consultants will view when visiting your Family Day Care Home. The consultants will be looking to see that these items are accurate, current, and posted so that they are easily seen by you, the children's parents, and your helper/assistant:

- Bright from the Start Certificate of Registration (You will receive your certificate once your application has been received, the initial licensing study has been completed, you have been given permission to operate, and you have paid the annual licensing fee.)
- Emergency Numbers (Posted near phone)
- Written Emergency Plan
- "No Smoking" Sign
- Fire Drill Record
- Statement of No Liability Insurance
- Parent/Guardian Acknowledgement of No Liability (Place a signed copy in each child's file/Do not post)
- Parents You Have the Right poster

Each provider is required to have copies of the following items completed and available for the consultant to review:

- Criminal Record Checks
- Helper Orientation Form
- Enrollment Form (for each child in care)
- Immunization Records (for each child in care that is not enrolled in a school-age program)
- Current CPR (Infant/Child/Adult) Card & First Aid Certificate
- Training Certificates (a total of 10 hours for each registration year)
- Infant Feeding Plan (for any child enrolled under the age of 1 year, with parent/guardian signature)
- Incident/Accident Reports
- Medical Authorization Forms
- Pet Vaccination Records
- Driver's License (If providing transportation)
- Notarized No Compensation Forms (for any child in care that you are not receiving any pay for services rendered in kind or cash)
- Documentation for Related Children
- Lifeguard Certificate for any pool activity (where water is more than 2 feet deep)

Family Day Care Home Rules and Regulations Checklist

This list is provided to assist you in evaluating and preparing you for your Pre-Registration Visit. This checklist has been developed from the *Rules & Regulations for Family Day Care Homes* (amended March 1, 1994). This is NOT an all-inclusive list, but covers many of the major areas in the Family Day Care Home Rules and Regulations. As a Family Day Care Home provider you are required to understand and comply with all family day care rules and regulations. You are required to complete this checklist, sign the affidavit on page 31 and send this checklist as a part of your Family Day Care application for registration.

YES	NO	REGISTRATION REQUIREMENTS AND APPLICATION	RULE NUMBER
		I understand that by definition, a family day care home provides care for three but no more than six children for pay.	290-2-3-.03(h)
		I have completed all required criminal record checks for myself.	290-2-3-.04(2)(c)
		I have completed all required criminal record checks for any individual who resides in my home or who assists in the duties of the family day care home.	290-2-3-.04(2)(c)1 290-2-3-.04(2)(c)2
		At no time will I allow any person who has an unsatisfactory criminal record determination reside at the home or have contact with the children.	290-2-3-.04(2)(c)2(i)
		I understand that my application for as a family day care home provider must include the following:	290-2-3-.04(2)(a)
		(1) Completion of a Registration Orientation Meeting	290-2-3-.04(2)(a)1
		(2) Pre-Service training that includes but is not limited to: early learning standards, communication, business management, and advocacy for the family day care home, parents, children and staff.	290-2-3-.04(2)(a)2
		(3) Cardiopulmonary resuscitation (CPR) and first aid training programs offered by certified or licensed health care professionals and approved by the department, which includes emergency care for infants, children, and adults.	290-2-3-.04(2)(a)3
		I understand that after receipt of my completed application package, the department will schedule a pre-registration visit to assess compliance of the family day care rules and regulations. I further understand that the department may deny my application if conditions exist at the pre-registration visit that poses health and/or safety risks to children.	290-2-3-.04(2)(a)3(b)
YES	**NO**	**INSPECTIONS AND INVESTIGATIONS**	**RULE NUMBER**
		I understand that the department is authorized to conduct on-site inspections and/or investigations during the operating hours of the home.	290-2-3-.05
		I understand that the agency representative must be allowed access to all areas of the family day care home when children are present.	290-2-3-.05(a)

YES	NO	INSPECTIONS AND INVESTIGATIONS, Cont.	RULE NUMBER
		I understand that failure to allow departmental access to the family day care home, the staff, the enrolled children, and applicable records and/or failure to cooperate with a departmental inspection/investigation may result in the denial, restriction, revocation or suspension of a registration.	290-2-3-.05(b)
		I will not make or condone any employee making false or misleading statements to the department in connection with any inspection/investigation.	290-2-3-.05(c)
YES	**NO**	**PARENTAL ACCESS**	**RULE NUMBER**
		I understand that parents/guardians shall have access to all child care areas of the home when children are present.	290-2-3-.06
YES	**NO**	**STAFFING AND SUPERVISION**	**RULE NUMBER**
		I am at least 21 years of age.	290-2-3-.07
		Effective 7/1/09, if I am a new Family Day Care Home applicant, I must have a current CDA or other approved credential.	290-2-3-.07(2)(a-g)
		I have current CPR certification, which includes infant/child and adult.	290-2-3-.07(4)
		I have current First Aid certification.	290-2-3-.07(4)
		I understand that each registration year, I must obtain a minimum of 10 clock hours of training from the following areas: child development; health; child abuse and neglect; business related topics.	290-2-3-.07(4)(a-d)
		I, nor any of my assistants or household members, have been shown by credible evidence to have abused, neglected, sexually exploited, or deprived a child or adult or to have subjected any person to serious injury as a result of intentional or grossly negligent misconduct.	290-2-3-.07(5)(a)
		I do not have any physical handicap or mental health disorder that interferes with my ability to provide care and supervision of the children in care.	290-2-3-.07(5)(b)
		I have not made any false statements to the department regarding my qualifications as a family day care home provider.	290-2-3-.07(5)(c)
		I understand that upon departmental approval, I may care for 2 additional children who are 3 years and older for two designated one-hour periods daily.	290-2-3-.07(6)
		I understand that an adult is always present with the child care children, and the children are not left with anyone under 18 years of age.	290-2-3-.07(7) 290-2-3-.03(a)
		I understand that there will not be more than 12 children under the age of 13 years present, including my own children and/or other related children, children for pay or for no compensation, when my family day care is open. I understand that I must also meet the requirement of 35 square feet per child.	290-2-3-.07(8) 290-2-3-.07(8)
		20	

YES	NO	STAFFING AND SUPERVISION (Cont)	RULE NUMBER
		I understand that a helper, at least 16 years of age must be present to assist me whenever (1) more than 3 children under 12 months old are present; (2) whenever: more than 6 children under 3 years old are present; or (3) whenever more than 8 children under 5 years of age are present. These ratios apply to ALL children on site.	290-2-3-.07(8)(a)1-3
		I understand that I must have an adult present who is certified by the American Red Cross or YMCA in life guarding whenever children participate in water activities where the water is over two feet in depth.	290-2-3-.07(9)
		For water-related activities where the water is over two feet in depth the following staff: child ratios must be maintained: under two years, six months of age-1:2; two years, six months to four years of age-1:5; four years and older, who cannot swim a distance of 15 yards unassisted-1:6; and four years and older who can swim a distance of 15 yards unassisted-1:8.	290-2-3-.07(9)(a)
YES	**NO**	**RECORDS**	**RULE NUMBER**
		I understand that I must maintain a current enrollment record on each child in care and to keep that record for one year after the child is no longer in care. I understand that the enrollment record must include:	290-2-3-.08(1)
		(a) The child's name, date of birth, parent's or guardian's name, complete home and business addresses, personal and business phone numbers;	290-2-3-.08(1)(a)
		(b) The name, address and telephone number of the child's physician and emergency contact person;	290-2-3-.08(1)(b)
		(c) Evidence of age-appropriate immunizations, or a signed affidavit certifying that the required immunizations conflict with the religious beliefs of the parent/guardian or a physician statement that immunization is contradicted;	290-2-3-.08(1)(c)
		(d) Written authorization for the child to receive emergency medical treatment when the parent is not available;	290-2-3-.08(1)(d)
		(e) Documentation of any medications given, which includes the child's name, name of the medication, date and time given, and the name of the person giving the medication;	290-2-3-.08(1)(e) 290-2-3-.11(1)(e)
		(f) Record of any allergies and other known medical conditions;	290-2-3-.08(1)(f)
		(g) Description of accidents or serious illnesses occurring while the child is in the family day care home, including date, time, and condition under which it occurred and the action taken;	290-2-3-.08(1)(g)
		(h) Parental agreements for transportation to include field trips, swimming and/or other activities away from the home;	290-2-3-.08(1)(h)
		(i) The name of person(s) to whom the child may be released.	290-2-3-.08(1)(i)

YES	NO	RECORDS (Cont)	RULE NUMBER
		I understand that I must have written policies and procedures that are kept current, made available to the parents and used to govern the operation of my family day care home. These policies and procedures will be consistent with applicable laws, regulations and these rules and include a written description of the services provided which specifies the following:	290-2-3-.08(2)(a)and(b)
		(a) Ages of the children served;	290-2-3-.08(2)(b)1
		(b) Months of operation;	290-2-3-.08(2)(b)2
		(c) Days of operation;	290-2-3-.08(2)(b)3
		(d) Hours of operation;	290-2-3-.08(2)(b)4
		(e) Dates the family day care home will be closed;	290-2-3-.08(2)(b)5
		(f) Admission requirements, including parental responsibilities for supplying and maintaining accurate required record information and escorting the child to and from the family day care home;	290-2-3-.08(2)(b)6
		(g) Standard fees, payment of fees, fees related to absences, vacations and other charges;	290-2-3-.08(2)(b)7
		(h) Transportation provided, if any;	290-2-3-.08(2)(b)8
		(i) Guidance and discipline techniques;	290-2-3-.08(2)(c)1
		(j) Handling emergency medical care, including where children will be taken for emergency medical care;	290-2-3-.08(2)(c)2
		(k) Administering medication and recording noticeable adverse reactions to medication;	290-2-3-.08(2)(c)3
		(l) Notifying parents/guardians of their child's: (1) illness; (2) injury (3) exposure to a notifiable communicable disease;	290-2-3-.08(2)(c)4
		(m) Noticeable adverse reaction to medication;	290-2-3-.08(2)(c)5
		(n) Exclusion of sick children;	290-2-3-.08(2)(c)6
		(o) Exclusion of children with communicable diseases, as defined on the chart of communicable diseases which contains recommendations for the exclusion of sick children and their readmission;	290-2-3-.08(2)(c)7
		(p) Protection of children in the event of: (i)severe weather; (ii)fire; (iii) physical plant problems, such as a power failure, that affects climate control, loss of water, or structural damages;	290-2-3-.08(2)(c)8
		(q) The transportation of children to and from school, if provided, to include the procedure to be followed if no one is home to receive the transported child;	290-2-3-.08(2)(c)9
		(r) Identification of others providing care. This includes the name of any caregiver, their responsibility and the name of who would be contacted in any emergency;	290-2-3-.08(2)(c)10
		(s) Parent's or guardian's ability to visit the family day care home unannounced and at any time that their child is in care;	290-2-3-.08(2)(c)11
		(t) Any information requested by the parent or guardian concerning the operation of the family day care home or the care of the child. Parents or guardian will be provided daily communication (written/verbal) regarding the care of the child, especially with infants, toddlers and nonverbal children;	290-2-3-.08(2)(c)12

YES	NO	RECORDS (Cont)	RULE NUMBER
		(u) Notification of the existence of a firearm in the family day care home;	290-2-3-.08(2)(c)13
		(v) Notification of any changes in the regular composition of the household. The provider must notify the parent(s) or guardian of anyone regularly on the premises, including but not limited to spouse, friend(s), relative(s), or significant other(s);	290-2-3-.08(2)(c)14
		(w) Notification of the existence of any pets or other animals residing in the home or on the property;	290-2-3-.08(2)(c)15
		(x) Notification of sleep position practices. The provider must notify parent(s) or guardians of Sudden Infant Death (SIDS) risk reduction practices, sleeping positioning policies, and arrangements for placing all infants on their backs for sleep.	290-2-3-.08(2)(c)16
		(y) Documentation the children's arrival and departure. The parent or authorized person will document each time the child is dropped off or picked up. The documentation shall include date, child's name, arrival and departure times, signature or initial of the parent, guardian or authorized person.	290-2-3-.08(2)(c)17
		I understand that I must maintain notarized documentation from the parents of all related children in care who do not reside in my home.	290-2-3-.08(3)
		I understand that I must maintain notarized documentation from the parents of the non-compensation status of any child in care.	290-2-3-.08(4)
		I understand I must maintain copies of satisfactory criminal record determinations for myself, all adult household members and any helpers.	290-2-3-.08(5)
		I understand that documentation of my required training must include the title of the training, the date of the training, the number of hours of the training and the name of the trainer.	290-2-3-.08(6)
		I understand that I must maintain documentation of my approved water and sewage services if the city/county does not provide these services.	290-2-3-.08(7)
		I understand that I must maintain documentation of monthly fire drills and the documentation must be maintained for at least one year.	290-2-3-.08(8) 290-2-3-.11(2)(c)
YES	**NO**	**CHILDREN'S ACTIVITIES**	**RULE NUMBER**
		I understand that the family day care home must provide a variety of daily activities appropriate for the children's chronological and developmental levels. Children with special needs will be integrated into the activities unless contraindicated medically or by parental agreement. Activities will be planned for each group to allow for:	290-2-3-.09(1)
		(a) Indoor and outdoor play;	290-2-3-.09(1)(a)
		(b) A balance of quiet and active periods;	290-2-3-.09(1)(b)
		(c) A balance of supervised free choice and caregiver-directed activities;	290-2-3-.09(1)(c)
		23	

		(d) Individual, small group and large group activities;	290-2-3-.09(1)(d)
		(e) Large muscle activities, such as, but not limited to, running, riding, climbing, balancing, jumping, throwing, or digging;	290-2-3-.09(1)(e)
		(f) Small muscle activities, such as, but not limited to, building with blocks or construction toys, use of puzzles, nesting or stacking toys, pegs, lacing, sorting beads, or clay;	290-2-3-.09(1)(f)
		(g) Language experiences, such as, but not limited to, listening, talking, rhymes, finger plays, stories, recordings, or flannel boards;	290-2-3-.09(1)(g)
		(h) Arts and crafts, such as, but not limited to, painting, coloring, cutting, or pasting;	290-2-3-.09(1)(h)
		(i) Dramatic play, such as, but not limited to, play in a home center, with dolls, puppets, or dress up;	290-2-3-.09(1)(i)
		(j) Rhythm and music, such as, but not limited to, listening, singing, dancing, or making music; and	290-2-3-.09(1)(j)
		(k) Nature and science experiences, such as, but not limited to, measuring, pouring, activities related to the “world around us” such as nature walks, plants, leaves or weather, or experiences in using the five senses through sensory play.	290-2-3-.09(1)(k)
		I understand that I must help children develop skills in all areas (washing, dressing, toileting, etc.) that are appropriate to their age and ability.	290-2-3-.09(2)
		I understand that all children must spend some time each day outside, weather permitting.	290-2-3-.09(3)
		I understand that each preschool child shall have a supervised nap period each day.	290-2-3-.09(4)
		I understand that infants and toddlers will not be routinely left in cribs, or playpens except for rest and sleep.	290-2-3-.09(5)
		I understand that the use of entertainment media such as television programs, video tapes and games must be suitable for young audiences and is limited to no more than two (2) hours of use each day.	290-2-3-.09(6)
		I understand I shall not use or children or other adults to engage in activities that may be detrimental to a child’s health or well-being such as, but not limited to horse play, rough play, wrestling, and picking up a child in a manner that could cause injury.	290-2-3-.09(7)
YES	**NO**	**NUTRITION AND FOOD SERVICES**	**RULE NUMBER**
		I understand that children must be served meals and snacks for the period of time they are present in the home.	290-2-3-.10(1)
		I understand that meals and snacks served are dependent on the age of the child and must be nutritious, well balanced and varied. Lunch and supper must consist of vegetables, fruit or both; meat, poultry, fish, cheese, eggs, or protein substitute; bread; and milk unless the child has a specific health reason for prohibiting milk.	290-2-3-.10(2)
		I understand that I cannot serve powdered nonfat milk. I can use this for cooking purposes only.	290-2-3-.10(3)

YES	NO	NUTRITION AND FOOD SERVICES, cont.	RULE NUMBER
		I will obtain from each parent, infant formula and a current feeding plan for any child less than 1 year of age,	290-2-3-.10(4)
		I understand that formula bottles must be labeled with the child's name and that any formula/milk not used must be discarded or returned to the parent at the end of the day.	290-2-3-.10(5)
		I understand that any child who cannot hold their bottle or sit independently must be held while being fed. I understand that bottles cannot be propped and that infant's heads must be elevated during feeding.	290-2-3-.10(6)
		I understand that all food in the family day care home must be in sound condition, free from spoilage or contamination and safe for human consumption.	290-2-3-.10(7)
		I understand that the refrigerator must maintain a temperature of 40 degrees or below.	290-2-3-.10(8)
		I understand that all perishable foods must be refrigerated.	290-2-3-.10(8)
		I understand that foods must be served promptly after cooking. Hot foods will be maintained at 140 degrees or above, except while being served.	290-2-3-.10(8)
		I understand that foods stored in cans, jars, and boxes must be stored above the floor on clean surfaces.	290-2-3-.10(9)
		I understand that garbage must be stored in trash containers with lids. The trash containers must be emptied and cleaned as needed. All areas around outdoor trash containers must be kept clean.	290-2-3-.10(10)
		I understand that I cannot use chipped or cracked dishes for serving food.	290-2-3-.10(11)
		I understand that the food preparation surface must be nonporous, have no cracks or unsealed seams.	290-2-3-.10(12)
		I understand the food preparation areas and equipment must be kept clean, and free of buildup of dust, dirt, food particles, and grease deposits.	290-2-3-.10(13)
		I understand that the person preparing the meal must wash their hands thoroughly with soap and water before starting food service work and as often as necessary during food preparation and serving to remove soil and contamination.	290-2-3-.10(14)
		I understand that non-deposable dishes and silverware must be cleaned by pre-rinsing, scraping, washing, sanitizing and air drying	290-2-3-.10(15)
		I understand that children shall not share eating or drinking utensils.	290-2-3-.10(16)
YES	**NO**	**HEATH, SAFETY AND DISCIPLINE**	**RULE NUMBER**
		I understand that I must maintain the department's Communicable Disease chart and follow the recommendations for exclusion of sick children.	290-2-3-.11(1)(a)
		I understand that an age appropriate immunization or affidavit or physician's statement must be obtained for each preschool age child within 30 days of admission.	290-2-3-.11(1)(b)

YES	NO	HEATH, SAFETY AND DISCIPLINE (Cont)	RULE NUMBER
		I understand that the parent or guardian of any child in care must be notified immediately when: the child becomes ill or is injured and required medical attention; or any illness which may not require medical attention but is causing the child moderate discomfort, such as an elevated temperature, vomiting or diarrhea.	290-2-3-.11(1)(c)
		I understand that I will obtain emergency medical services when required by the child.	290-2-3-.11(1)(d)
		I understand that with the exception of first aid, I cannot handout any medications without the specific written consent of the parent, guardian or child's physician.	290-2-3-.11(1)(e)
		I understand that all medications must be stored according to the prescription or label instructions. Medications must be kept in places that are inaccessible to children.	290-2-3-.11(1)(e)
		I understand that each dose of medication given must be documented with: the child's name, name of the medication, date and time given, and the name of the person giving the medication.	290-2-3-.11(1)(e)
		I will maintain the following supplies in the first aid kit: a first aid manual, written directions on the use of universal precautions for handling blood and bodily fluids, protective eyewear and facemask, scissors, tweezers, gauze pads, thermometer, adhesive tape, band-aids, insect sting preparation, antiseptic cleansing solution, antibacterial ointment, bandages, disposable rubber gloves and a cold pack.	290-2-3-.11(1)(f)
		I understand that all first aid supplies must be maintained in a kit. There must be a kit for the family day care home and in any vehicle used for transportation. The first aid kit must be stored in a central location that is inaccessible to children.	290-2-3-.11(1)(f)
		I understand that diapers will be changed in the child's own crib or on a nonporous surface which is cleaned with a disinfectant and dried with a single use disposable towel after each diaper change.	290-2-3-.11(1)(g)
		I understand that all soiled diapers and linens will be disposed of in a closed container.	290-2-3-.11(1)h)
		I understand that if used, potty chairs shall be emptied into a flush toilet, cleaned with a disinfectant, and stored in the bathroom.	290-2-3-.11(1)(i)
		I understand that I will wash my hands with liquid soap and warm running water:	290-2-3-.11(1)(j)
		1. Immediately before and after each diaper change.	290-2-3-.11(1)(j)1
		2. Immediately upon the first child's arrival for care and upon re-entering the home after outside play.	290-2-3-.11(1)(j)2
		3. Before and after dispensing oral medications, applying topical medications, ointments, etc., handling and preparing food, eating, drinking, preparing bottles, feeding each child and assisting children with eating and drinking.	290-2-3-.11(1)(j)3

YES	NO	HEATH, SAFETY AND DISCIPLINE (Cont)	RULE NUMBER
		4. After toileting or helping children with toileting, using tobacco products, handling garbage and organic waste, touching animals or pets, handling bodily fluids, such as, but not limited to mucus, saliva, vomit, or blood or contamination by any other means.	290-2-3-.11(1)(j)4
		I understand that children's hands shall be washed with liquid soap and warm running water	290-2-3-.11(1)(k)
		1. Immediately upon arrival for the day and re-entering the child care area from outside play.	290-2-3-.11(1)(k)1
		2. Before and after eating meals and snacks, handling or touching food, and playing in water.	290-2-3-.11(1)(k)(2)
		3. After toileting and diapering, playing in sand, touching animals or pets, contact with bodily fluids such as, but not limited to mucus, saliva, vomit or blood, and after contamination by any other means.	290-2-3-.11(1)(k)3
		I understand that washcloth handwashing is permitted for infants when the infant is too heavy to hold for handwashing or cannot stand safely to wash hands at a sink and for children with special needs who are not capable of washing their own hands.	290-2-3-.11(1)(k)4
		I understand that an individual washcloth shall be used only once for each child before laundering.	290-2-3-.11(1)(k)4
		I understand that when children are present there will be no smoking in the family day care home or on the property of the family day care home.	290-2-3-.11(1)(l)
		I understand that children in care must be kept clean, dry and comfortable.	290-2-3-.11(1)(m)
		I understand that any pet in the home must be vaccinated according to the local Boards of Health.	290-2-3-.11(1)(n)
		I understand that pets must be confined and inaccessible to when children are present.	290-2-3-.11(1)(n)
		I understand that no animal, such as, but not limited to pit bull dogs, ferrets, and poisonous snakes, which may have a vicious propensity are permitted on the premises when there are children on the premises.	290-2-3-.11(1)(o)
		I understand that I must have a written plan for handling emergencies that include: fire; severe weather; loss of electrical power or water; the serious injury of a child; children who are lost; and the death of a child.	290-2-3-.11(2)(a)
		I understand that no persons at the family day care home can impede or hinder the delivery of emergency care or services to a child by licensed or certified emergency health care professionals.	290-2-3-.11(2)(a)
		I must have an operable phone at the family day care home at all times.	290-2-3-.11(2)(b)
		I understand I must post in a conspicuous area next to the telephone, these emergency phone numbers: a physician or hospital; an ambulance or rescue squad service; the local fire department; the local police or law enforcement; the county health department; and the regional poison control. If I have 911 service, I do not have to have separate telephone numbers for an ambulance, the fire or police departments.	290-2-3-.11(2)(b)
		27	

YES	NO	HEATH, SAFETY AND DISCIPLINE (Cont)	RULE NUMBER
		I understand that I must practice fire drills on a monthly basis and document each fire drill. I must maintain this documentation for one year.	290-2-3-.11(2)(c)
		I understand that children must not have access to hanging cords or other hazardous items.	290-2-3-.11(2)(d)
		I understand that clear glass doors must be marked to avoid accidental impact.	290-2-3-.11(2)(e)
		I understand that poisons, medicines, cleaning agents, razors, aerosol cans and other potential hazardous materials shall be stored out of reach of children or in locked cabinets.	290-2-3-.11(2)(f)
		I understand that firearms must be inaccessible to children. I must provide written notification to parents that a firearm is located in the home.	290-2-3-.11(2)(g)
		I understand that I must maintain at least one UL Approved smoke detector. The smoke detector must be in working order and be located on each level of the home.	290-2-3-.11(2)(h)
		I understand that I must maintain at least one 2-A-5-B:C fire extinguisher in the child care area and no more than 30 feet from the kitchen. It must be maintained in working condition and inaccessible to children. (State fire marshal requires 2-A-10-B:C) **?**	290-2-3-.11(2)(h)
		I understand that no flammable liquids can be stored in the home.	290-2-3-.11(2)(i)
		I understand I must have a valid driver's license to transport children.	290-2-3-.11(2)(j)
		I understand that if I transport children, each child must be restrained by a seat belt or child passenger restraint appropriate for the child's height/weight and in accordance with state law.	290-2-3-.11(2)(j)
		I understand that no child will be left unattended in a motor vehicle.	290-2-3-.11(2)(j)
		I understand that any disciplinary action used to correct a child's behavior will not be detrimental to the child's physical or mental health.	290-2-3-.11(3)
		I understand that I nor any other home employee or member may:	290-2-3-.11(3)(a)
		1. Physically or sexually abuse a child, or engage in or permit others to engage in sexually overt conduct in the presence of any enrolled child in the home;	290-2-3-.11(3)(a)1
		2. Inflict corporal/physical punishment upon a child;	290-2-3-.11(3)(a)2
		3. Shake, jerk, pinch or handle roughly a child; or	290-2-3-.11(3)(a)3
		4. Verbally abuse or humiliate a child which includes, but is not limited to, the use of threats, profanity, or belittling remarks about a child or his family; or	290-2-3-.11(3)(a)4
		5. Isolate in a child in a dark room, closet, or unsupervised area; or	290-2-3-.11(3)(a)5
		6. Use mechanical or physical restraints or devices to discipline children; or	290-2-3-.11(3)(a)6)
		7. Use medication to discipline a child, or to control children's behavior without written medical authorization issued by a licensed professional and given with the parent's written consent.	290-2-3-.11(3)(a)7
		28	

YES	NO	HEATH, SAFETY AND DISCIPLINE (Cont)	RULE NUMBER
		8. Discipline a child by restricting unreasonably a child from going to the bathroom; by punishing toileting accidents; by force feeding a child; or by not feeding a child regularly scheduled meals/snacks; by forcing or withholding naps; by allowing children to discipline or humiliate other children; or by confining a child for disciplinary purposes to a swing, high chair, infant carrier, walker or jump seat.	290-2-3-.11(3)(a)8
		9. Commit any criminal act, as defined under Georgia law which is set forth in O.C.G.A. Sec. 16-1-1 et seq., in the presence of any child enrolled in the home.	290-2-3-.11(3)(a)9
YES	**NO**	**EQUIPMENT AND SUPPLIES**	**RULE NUMBER**
		I understand that I must provide each child a variety of age-appropriate toys, books and play equipment and material to insure that each child has the opportunity to experience and participate in a variety of activities.	290-2-3-.12(1)
		I understand that each child must have a clean and comfortable place to nap.	290-2-3-.12(2)
		I understand that a crib with a waterproof mattress is required for each child less than one year of age.	290-2-3-.12(2)
		I understand that individual or disposable wash cloths and towels must be available for each child.	290-2-3-.12(3)
		I understand that furnishings and equipment must be maintained in a clean and safe usable condition.	290-2-3-.12(4)
		I understand that all indoor and outdoor furniture, materials, and equipment shall be: (a) Used in a safe and appropriate manner; (b) Used as the manufacturer intended.; (c) Free from hazardous conditions (d) Kept clean; (e) Placed to permit freedom of movement and minimize danger of accident; (f) Secured if it is of a weight or mass that could cause injury by tipping, falling, or being pulled or pushed over.	290-2-3-.12(5)(a) – (f)
		I understand that toys must be stored on low, open shelves accessible to the children.	290-2-3-.12(6)
		I understand that toys for children under three must be age appropriate and:	290-2-3-.12(7)
		(a) Non-toxic and lead-free;	290-2-3-.12(7)(a)
		(b) Too large to be swallowed by a child and not capable of causing choking or strangulation;	290-2-3-.12(7)(b)
		(c) Free of sharp edges or small parts children could pry off;	290-2-3-.12(7)(c)
		(d) Free of rust;	290-2-3-.12(7)(d)
		(e) Easily cleaned with a disinfectant daily.	290-2-3-.12(7)(e)
YES	**NO**	**BUILDING AND GROUNDS**	**RULE NUMBER**
		I understand that the home must be kept clean and free from obvious hazards to the children's health and safety.	290-2-3-.13(1)
		29	

YES	NO	BUILDING AND GROUNDS, cont.	RULE NUMBER
		I understand that the child care area must have a minimum of 35 square feet of usable floor space per child.	290-2-3-.13(1)(a)
		I understand that basement areas that are more than 25 feet from a window will not be used for child care.	290-2-3-.13(1)(b)
		I understand that furniture and equipment must not block or interfere with the exits from the home.	290-2-3-.13(1)(c)
		I understand that the home must be kept free of fire hazards and unnecessary or excessive combustible material.	290-2-3-.13(1)(d)
		I understand that when in use, radiators, open fire, oil or wood burning stoves, floor furnaces and similar hazards must have a barrier or screen to prevent children from being burned.	290-2-3-.13(1)(e)
		I understand that unvented fuel fired heaters cannot be used in the home unless there is an oxygen depletion safety shut off system.	290-2-3-.13(1)(f)
		I understand that multiple plugs and extension cords cannot be used in the home.	290-2-3-.13(1)(g)
		I understand that electrical outlets within the children's reach must be covered.	290-2-3-.13(1)(g)
		I understand that fans must be positioned or installed in a manner that is inaccessible to children.	290-2-3-.13(1)(h)
		I understand that measures must be taken to prevent the presence of rodents, flies, roaches and other vermin in the home.	290-2-3-.13(1)(i)
		I understand that windows or doors used for ventilation must be screened.	290-2-3-.13(1)(i)
		I understand that if I do not have a water/sewage system provided by the county or city systems, I must have documentation that my system is approved by the proper authority having jurisdiction.	290-2-3-.13(1)(j)
		I understand that outside grounds and play areas must be kept clean and free of hazards. Hazards may include but are not limited to: exposed sharp edges of concrete or equipment, broken glass, debris, open drainage ditches, holes and stagnant water.	290-2-3-.13(2)(a)
		I understand that non-portable climbing and swinging equipment must be anchored.	290-2-3-.13(2)(b)
		I understand that a resilient surface must be provided beneath the climbing and swinging equipment and the fall zone from such equipment. The resilient surface must be maintained to assure continuing resiliency.	290-2-3-.13(2)(b)
		I understand that outside play areas must be protected from traffic or other hazards by fencing or other barriers at least four feet in height.	290-2-3-.13(2)(c)
		I understand that a fence must be provided around swimming pools to make them inaccessible when not in use.	290-2-3-.13(2)(c)
		I understand that fencing materials must not be hazardous to children.	290-2-3-.13(2)(c)
YES	**NO**	**REPORTING**	**RULE NUMBER**
		I understand that within 24 hours or the next workday, I must report the following to Bright from the Start:	290-2-3-.14(1)
		1. Any death of a child while in the care of the home	290-2-3-.14(1)(a)

YES	NO	REPORTING, cont.	RULE NUMBER
		2. Any serious illness or injury to a child requiring hospitalization or professional medical attention;	290-2-3-.14(1)(b)
		3. Any fire;	290-2-3-.14(1)(c)
		4. Any structural disaster;	290-2-3-.14(1)(d)
		5. The closing of the home.	290-2-3-.14(1)(e)
		6. Any situation when a child in care becomes missing.	290-2-3-.14(1)(f)
		I understand I must report any suspected incident of abuse or neglect to the local county Dept. of Family and Children Services	290-2-3-.14(2)
		I understand that any cases or suspected cases of notifiable communicable diseases must be reported to the local county health department and to Bright from the Start.	290-2-3-.14(3)
YES	**NO**	**INFANT-SLEEPING SAFETY REQUIREMENTS**	**RULE NUMBER**
		I understand that in order to reduce the risk of Sudden Infant Death Syndrome(SIDS), staff must comply with the following:	290-2-3-.19
YES	**NO**	**INFANT-SLEEPING SAFETY REQUIREMENTS, cont.**	**RULE NUMBER**
		1. Infants will be placed to sleep on their back unless the home has been provided a physician's written statement authorizing another sleep position. When the infant can easily turn over to his stomach, the infant will still be initially placed on his back to sleep but allowed to roll over onto his or her stomach as the infant prefers.	290-2-3-.19
		2. Infants will be placed on a firm, tight fitting mattress in a sturdy and safe crib. If the crib has sidebars, the bars will be no more than two and three-eighths inches (2 3/8) apart.	290-2-3-.19
		3. Any crib used for sleeping will have a tight fitting bottom crib sheet, with no pillows, quilts, comforters, bumper pads, sheepskins, stuffed toys, or other soft items in the crib.	290-2-3-.19
		4. If a blanket is required, the infant's feet will be placed at the foot of the crib and the infant shall be covered with the blanket only to the chest level with the blanket tucked firmly under the crib mattress.	290-2-3-.19
		5. The infant's sleeping area will have a maintained temperature range of 65 degrees to 85 degrees.	290-2-3-.19
		6. Positioning devices that restrict the infant's movement in the crib shall not be used unless a physician's written statement authorizing its use is provided for that particular infant.	290-2-3-.19

YES	NO	ENFORCEMENT AND PENALTIES	RULE NUMBER
		I understand that if the department finds that I have violated any provisions of these rules, or other laws, rules, regulations, it may, subject to notice and opportunity for hearing, take the following actions against me: administer a public reprimand; limit or restrict a registration; suspend a registration; impose a fine; refuse to renew a registration, or revoke a registration.	290-2-3-.15(a)

- I HEREBY CERTIFY THAT I HAVE READ AND UNDERSTAND THE RULES AND REGULATIONS FOR FAMILY DAY CARE HOMES.
- I HEREBY CERTIFY THAT I HAVE ASSESSED MY FAMILY DAY CARE HOME AGAINST THE RULES AND REGULATIONS CHECKLIST AND FOUND IT TO BE IN COMPLIANCE WITH ALL FAMILY DAY CARE RULES AND REGULATIONS.
- I UNDERSTAND THAT THIS SIGNED AND COMPLETED FAMILY DAY CARE HOME RULES AND REGULATIONS CHECKLIST MUST BE INCLUDED IN MY APPLICATION TO BECOME A REGISTERED FAMILY DAY CARE HOME PROVIDER.
- I HEREBY CERTIFY THAT THIS INFORMATION IS TRUE AND CORRECT TO THE BEST OF MY KNOWLEDGE.
- I UNDERSTAND THAT ANY WILLFUL MISREPRESENTATION OF ANY OF THE ABOVE FACTS IS CAUSE FOR IMMEDIATE DENIAL OR REVOCATION OF MY REGISTRATION.

_____ _____

SIGNATURE DATE

Emergency Telephone Numbers

Family Day Care Home Rule: 290-2-3-.11(2)(b)

An operable telephone shall be readily available in the home with the following telephone numbers posted in a conspicuous place next to the telephone.

	Physician or Hospital	
	Ambulance or Rescue Squad Service	911 or
	Local Fire Department	911 or
	Police Department	911 or
	County Health Department	
Local Department of Family and Children Services (DFCS)		
	Georgia Poison Center Regional Poison Control Center	Metro Atlanta: 404-616-9000 or Toll Free: 1-800-222-1222
	Consumer Product Safety Commission	**Toll-free Consumer Hotline:** 1-800-638-2772 http://www.cpsc.gov/

Emergency Procedure Examples

The following page is a form that you may use to assist you when stating the emergency procedures that you will follow in the case of an actual or practice emergency situation. Below are examples that you may use. Please create your own emergency procedures on the following page. Post your completed Emergency Procedure form in an area that you, as well as, your enrolled children's parents, your family and assistants can easily view.

The following procedures will be followed in the circumstances listed below:

In Case of Fire: Get the children out of the house and meet at my designated "meeting place" (the large tree in the front yard). Call the fire department. Call the parent/guardian of each child in care. Call Bright from the Start: Georgia Department of Early Care and Learning-Child Care Services at (404) 657-5562 or my local consultant within 24 hours.

In Case of Severe Weather: Remain calm. Move the children into the hallway away from windows. In case of a tornado have the children place their heads between their knees with their backs to the wall. Listen to the radio for weather updates.

In Case of Loss of Electrical Power: Remain calm. Call the power company to report power loss, if in hot weather, open the window if possible. In cooler weather, put on warmer clothing or get blankets out for the children. Call the parents/guardians if the power will be out for an extended period time.

In Case of Loss of Water: Call the water department if in the city. Call the plumber if in a rural area. Call the parents/guardians if the water will remain out of service for an extended length of time. I have bottled water available for drinking, hand washing and toileting purposes in the case that water is lost for an extended period of time and the children are unable to be picked up by their parent/guardian.

In Case of Serious Injury to a Child: Call 911 or the ambulance service. Keep the child calm and comfortable until medical service arrives. Call the child's parents to report the injury. Report the injury to Bright from the Start: Georgia Department of Early Care and Learning-Child Care Services (404) 657-5562 or my local Consultant within 24 hours.

In Case of Loss of a Child: Call 911 or the police. Call the child's parent to report the loss. Keep the other children calm. Call my neighbor to help assist in the search. Look in the house, yard and surrounding areas.

In Case of the Death of a Child: Call 911 and the police. Call the child's parents. Keep the other children calm. Report the death to Bright from the Start: Georgia Department of Early Care and Learning -Child Care Services (404) 657-5562 or my local Consultant within 24 hours.

Emergency Procedures Form

Family Day Care Rule: 290-2-3.11(2)(a)

A home shall have a written plan for handling emergencies, including but not limited to fire, severe weather, loss of electrical power or water, and death, serious injury or loss of a child, which may occur at the home. No home personnel shall impede in any way the delivery of emergency care or services to a child by licensed or certified emergency health care.

1. In Case of a Fire: _____

_____

_____

_____

2. In Case of Severe Weather: _____

_____

_____

_____

3. In Case of Loss of Electrical Power: _____

_____

_____

_____

4. In Case of Loss of Water: _____

_____

_____

_____

5. In Case of Serious Injury to a Child: _____

_____

_____

_____

6. In Case of Loss of a Child: _____

_____

_____

_____

7. In Case of Death of a Child: _____

_____

_____

_____

No Smoking On Child Care Premises *

* It is a misdemeanor for a person to smoke on the child care premises.

Fire Drill Documentation Form

Family Day Care Rules: 290-2-3.08(8) and .11(2)(c)

This document must be kept for one year after completion.

for _____

(Year)

FIRE DRILL

	JAN	FEB	MAR	APR	MAY	JUN	JUL	AUG	SEP	OCT	NOV	DEC
DATE												
TIME												
NUMBER OF CHILDREN												
LENGTH OF DRILL*												

*The GOAL is to have evacuation time complete in less than 2 minutes.

SMOKE DETECTOR

	JAN	FEB	MAR	APR	MAY	JUN	JUL	AUG	SEP	OCT	NOV	DEC
DATE DETECTOR CHECKED												
DATE** BATTERIES CHECKED												

**Batteries should be checked annually.

FIRE EXTINGUISHER

	JAN	FEB	MAR	APR	MAY	JUN	JUL	AUG	SEP	OCT	NOV	DEC
DATE CHECKED												

What will the person discovering the fire do?_____

How will you sound an alarm? _____

What will you do before the fire department arrives? _____

How will you make sure all persons are evacuated and accounted for? _____

Family Day Care Home Rule: 290-2-3-.11(1)(f)

The following first aid supplies, along with a manual of instructions, shall be maintained in a central location inaccessible to the children: scissors, tweezers, gauze pads, thermometer, adhesive tape, band-aids, insect-sting preparation, antiseptic cleaning solution, antibacterial ointment, bandages, disposable rubber gloves, face mask, protective eye, cold pack, procedures for handling blood and bodily fluids.

Your First Aid Kit should be located in an area that is not accessible to the day care children.

Your First Aid Kit should include:

- ☐ Scissors
- ☐ Tweezers
- ☐ Gauze pads
- ☐ Medical tape
- ☐ Thermometer
- ☐ Face Mask
- ☐ Protective Eyewear
- ☐ Band aids
- ☐ Insect sting preparation (over the counter cream, spray, or ointment)
- ☐ Antibacterial ointment (Bacitracin or Neosporin)
- ☐ Antiseptic cleaning solution (Betadine, alcohol, alcohol wipes, hydrogen peroxide)
- ☐ Rubber gloves
- ☐ Cold pack (**This may need to be in the freezer instead of the kit.*)
- ☐ Triangular bandage (**This must be large enough to make into a sling.*)
- ☐ Procedures for handling blood and bodily fluids
- ☐ First Aid Manual

Remember to check expiration dates!

Injury/Illness Report

Family Day Care Rule: 290-2-3-.08(1)(g)

Description of accidents or serious illnesses that occur while child is in the family day care home, including date, time and condition under which it occurred and the action taken.

Name of Injured/Ill Child:					
Date of Injury/Illness:			Time of Injury/Illness: a.m. or p.m.		
Place where Injury/Illness occurred:					
Describe the activity the child was involved in at the time of the Injury/Illness:					
Was first aid given?		Yes	If yes, please describe:		
		No			
Were emergency services called?		Yes	If yes, please describe:		
		No			
Was a doctor contacted?		Yes	If yes, give time of call: a.m. or p.m.		
		No	Name(s) of doctor(s):		
Parent/Guardian Notified?		Yes	If Yes, give time: a.m. or p.m.	Did child remain in child care facility?	Yes
					No
		No	Method of Notification:	Time child picked up: a.m. or p.m.	
Corrective action taken to prevent reoccurrence:					
Additional Comments:					
Signature of Provider:			Date:		
Signature of Parent/Guardian:			Date:		

Note: All accidents occurring in the Family Day Care Home that require medical attention should be reported to Bright from the Start: Georgia Department of Early Care and Learning - Child Care Services within 24 hours.

Authorization to Dispense Medication

Family Day Care Rule: 290-2-3.11(1)(e)

Except for first aid, personnel shall not hand out prescription or nonprescription medications to a child without specific written authorization from the child's physician or parent. All medications shall be stored in accordance with the prescription or label instructions and kept in places that are inaccessible to children. Each dose of medication given to a child shall be documented showing the child's name, name of medication, date and time given, and the name of the person giving the medication.

*It is up to the provider to decide whether or not they dispense non-prescription medication.

Child's Full Name:				
Name of Medication:				
Prescription Number:				
Physician's Name:		Phone Number:		
Date(s) to give medication:				
Time of day medication is to be given:	a.m. or p.m.	a.m. or p.m.	a.m. or p.m.	a.m. or p.m.
Amount (Dosage) of medication to be given each time:				
How medication is to be stored:				

_____

Parent/Guardian Signature Date

Medication Record to be completed by Child Care Provider

Date	Time (a.m./p.m.)	Amount (Dosage)	Any Adverse Reaction	Signature of person giving medication

If adverse reaction to medication was noted, please describe action taken:

_____

_____

_____

Note: This form must be used for all over-the-counter medications (e.g., Tylenol, cough syrup, Benadryl) <u>and</u> all prescription medications including the use of a Nebulizer.

Authorization to Dispense External Preparations

Family Day Care Home Rule: 290-2-3.11(1)(e)

Except for first aid, personnel shall not hand out prescription or nonprescription medications to a child without specific written authorization from the child's physician or parent. All medications shall be stored in accordance with the prescription or label instructions and kept in places that are inaccessible to children. Each dose of medication given to a child shall be documented showing the child's name, name of medication, date and time given, and the name of the person giving the medication.

Child's Name _____ Date _____

I hereby give _____ permission to apply one or more of
(Provider's Name)

the following products, in accordance with directions on the container (Check all that apply):

	Baby Wipes
	Band-aids
	Neosporin, Bacitracin or similar ointment
	Bactine or similar first aid spray
	Sunscreen
	Insect Repellent
	Non-prescription ointment (A&D, Desitin, Vaseline, etc.)
	Other (please specify):
	Other (please specify):

I hereby request that _____ administer the checked
(Provider's Name)

products in accordance with the directions on the container.

_____ _____
Parent/Guardian Signature Date

_____ _____
Parent/Guardian Signature Date

Medical Care and Emergency Contact Information

Child's Name: _____ Birth Date _____

Address _____

Mother's Name _____ Phone (H) _____ Phone (W) _____

Father's Name _____ Phone (H) _____ Phone (W) _____

Alternate Emergency Contact 1) _____ Phone _____

Alternate Emergency Contact 2) _____ Phone _____

Child's Physician _____ Phone _____

Family Physician _____ Phone _____

Known Allergies of Child (medicine, food, etc.) _____

Describe past serious illnesses or hospitalization, with dates _____

Medicines taken by child _____

Date of last tetanus injection _____

Describe all physical conditions or illnesses, which could affect the child's participation in the programs or proper medical treatment (diabetes, epilepsy, poor blood clotting, etc.) _____

Health Insurance: Company _____ Policy Number _____

Notarized Emergency Medical Treatment Consent

I hereby give _____ permission to provide first aid care for my child, _____. In the event I cannot be reached, I hereby authorize _____ _____ to transport my child to the emergency room of the hospital(s) listed below, And I hereby grant my consent for the hospital and its medical staff to provide my child with emergency medical treatment which a physician deems necessary (including anesthesia). If I have not specified any hospital(s) below, my child may be taken to and cared for at the nearest hospital. I agree to accept financial responsibility for all medical expenses incurred.

Hospital _____ Hospital _____

_____ Nearest Hospital

_____ _____

Parent/Guardian Date Parent/Guardian Date

State of: _____

County of: _____

The foregoing Consent was acknowledged before me this _____ day of _____, 20 _____, by _____ and _____.

(Notary Seal) Notary Public My Commission Expires:

INFANT FEEDING PLAN

Family Day Care Home Rule: 290-2-3.10(4)

The provider shall obtain from the parents an infant feeding plan for children less than 1 year of age.

Child's Name _____ **Date of Birth**_____

Date Form Completed _____

Does your child take a bottle? ☐ Yes ☐ No	**Does your child eat: (check all that apply)**
Is the bottle labeled? (with child's name) ☐ Yes ☐ No	☐ Strained foods ☐ Formula
Is the bottle warmed? ☐ Yes ☐ No	☐ Baby foods ☐ Breast milk
Does the child hold own bottle? ☐ Yes ☐ No	☐ Table foods ☐ Whole Milk
Can the child feed self? ☐ Yes ☐ No	☐ Other:

What type of formula is used? _____

Amount of formula /breast milk to be given: _____

Updated amounts of formula/breast milk: _____ Date: _____

_____ Date: _____

_____ Date: _____

Instructions for the introduction of solid foods: _____

_____

Food likes: _____

Food dislikes:_____

Does child take a pacifier? ☐ Yes ☐ No If yes, when? _____

Does your child have Allergies/Known Medical Conditions (Include any premixed formula)? ☐ Yes ☐ No

If yes, please list: _____

Your child will be placed on back to sleep per SIDS rules unless written doctor's statement is provided.

CHILD'S SCHEDULE

Breakfast _____ (approximate time) _____ Type and approximate amount of food

Lunch _____ (approximate time) _____ Type and approximate amount of food

Dinner _____ (approximate time) _____ Type and approximate amount of food

Morning Nap _____ (approximate time) Afternoon Nap _____ (approximate time)

Infant feeding plan needs to be updated every three months, or as needed, in regards to adding new foods or other dietary changes with a new parent/guardian signature and date:

_____ _____

Parent/Guardian Signature **Date**

Liability Notice to Parents and Guardians:

This Facility Does Not Carry Liability Insurance Coverage Sufficient to Protect Your Children in the Event of an Injury, etc.

Posted per SB 24 (2004) requiring child care facility owners to post in a conspicuous place if the child care facility is not covered by liability insurance and to provide and retain written notice regarding no coverage to the parents and guardians.

PARENT/GUARDIAN NOTICE OF NO LIABILITY INSURANCE AND ACKNOWLEDGMENT

(Only Complete this Form if Instructed by your Child Care Provider)

I understand I am being informed in writing by signing this acknowledgment that this child care facility does not carry liability insurance sufficient to protect my children in the event of an injury, etc.

Parents'/Guardians' Signature(s):

Date: _____

Date: _____

Printed Name(s):

_____

_____

Per SB 24 (2004) requiring child care facility owners who are not covered by liability insurance to **provide and retain written notice** regarding no coverage to the parents and guardians.

Parents

You have the right:

- **To access this facility anytime your child is in care.**
  However, you need to immediately make your presence known to the person in charge of the facility.
- **To review a copy of the facility's latest licensure evaluation report.**
  The facility director has the report.

A copy of the rules and regulations which apply to this facility is available. Please ask your provider to share them with you. You may also review the rules and regulations by visiting the Bright from the Start website at www.decal.ga.gov. These rules establish minimum requirements for the health, safety and well-being of all children in care.

Bright from the Start: Georgia Department of Early Care and Learning, is required by law to investigate complaints regarding rule violations. If you have any complaints or concerns about your child's care, you may call (404) 657-5562. Inspections of facilities can be viewed on our website at http://www.decal.ga.gov

Helper Orientation Checklist

Family Day Care Rule: 290-2-3-.07(7)

At least one adult shall supervise children at all times. Such adult, if not the provider, shall receive orientation regarding these rules; the provider's policies regarding discipline, injuries and illnesses, and release of children; the provider's written plan for handling emergencies; and appropriate information about any child's specific health needs. Plans shall be made to obtain additional adult help in cases of emergencies.

- ☐ Helper received orientation to the Family Day Care Home Rules and Regulations.
- ☐ Helper received orientation to my family day care policies.
- ☐ Helper received training about my written emergency plans.
- ☐ Helper received training regarding specific health needs, including allergies, for all children in care.

Helper's Signature _____ Date _____

Provider's Signature _____ Date _____

Date(s) of Orientation/Training _____

Place this form in the helper's file with other information including the helper's Criminal Record Check, any training received, etc. Please note: Under the Family Day Care Home Rules and Regulations, annual training is not required for helpers. The provider may decide to require annual training for their helper/assistant under their policies and procedures for their family day care home.

Pets in the Family Day Care Home

Family Day Care Rules: 290- 2- 3-.11(1)(n)and (o)

Pets in the home shall be vaccinated in accordance with the requirements of your local county Board of Health. Unconfined pets shall not be permitted in child care areas when children are present, except for supervised learning experiences.

Pets are found in many homes in Georgia. It is important to remember as a registered family day care provider:

- You must have documentation that all your pets have been vaccinated according to local county Boards of Health.
- All pets must be restricted from the child care area, unless a pet is part of specific child activity.
  - You must be able to control pets and all other animals to keep the premises sanitary
  - Animals with a vicious propensity (such as, pit bull dogs, ferrets, poisonous snakes) are not allowed on the premises when children are present.
- Remember adequate supervision is a must!

A number of children are killed each year by an animal attack and many other children have required medical treatment such as stitches, tetanus shots or rabies prevention shots. Animal bites, scratches, and especially puncture type wounds, carry a significant risk of infection. Severe injuries such as multiple bites, deep or gaping lacerations, wounds with excessive or continuous bleeding, wounds which are painful or puncture-type, should receive immediate medical attention. Injuries that appear minor at first may become severe due to infection. This usually happens within 24 hours. Signs of infection include increasing pain, swelling, redness, drainage of pus, chills, fever, and red streaks.

If a child is bitten by an animal what do I do?

- Don't panic!
- Remove the child from any further danger. If safe to do so, restrain the animal. Do not attempt to restrain any unknown animal.
- Perform appropriate first aid measures (apply pressure to stop the bleeding, call 911 or your local emergency number if medical assistance is needed.)
- Follow up by contacting the parent/guardian of the injured child, a veterinarian, the local Animal Control Department and Bright from the Start.

Keeping your Family Child Care Area Clean

Family Day Care Rules: 290-2-3-.13(1)

The home's building shall be kept clean and free from obvious hazards to the children's health and safety.

The following are suggestions on how to help you keep your family day care area clean and free from contamination.

General cleaning and sanitizing procedures:

1. Wash surface or article vigorously with warm water and detergent.
2. Rinse with clean water.
3. Submerge, wipe, or spray with a solution of ¼ cup of chlorine bleach in 1 gallon of water or 1 tablespoon of chlorine bleach to 1 quart of water. Chlorine bleach is recommended since it is readily available, inexpensive, effective, and safe when diluted as instructed.
4. Wait 2 minutes and wipe dry or let surface air dry.

When properly mixed, bleach solution is efficient of twenty-four (24) hours. Bleach solution must be made fresh daily. We recommended that you make your bleach solution at the same time each day to establish an effective routine.

For hard, nonabsorbent surfaces:

1. Homes and centers caring for infants and toddlers should wash, rinse, and sanitize with safe sanitizing solution those articles and surfaces that have been or are likely to be placed in children's mouths or in contact with the mouth.
2. Wash, rinse, and sanitize all other toys and surfaces when visibly dirty or contaminated with vomit, feces, urine, nasal discharge, etc. Develop a cleaning schedule for these items to ensure they are cleaned regularly.

For absorbent items (e.g. stuffed toys, bedding, clothes, etc.)

1. Use only washable stuffed toys, and dress up clothes.
2. Launder stuffed toys, sheets, and blankets regularly or when visibly dirty or contaminated with vomit, feces, urine, or other bodily discharges. Items should be washed in HOT water.
3. Laundered bedding items should be protected from contamination through proper storage, such as a closet, a shelf or in a drawer.
4. Do NOT store unsanitary or items that are not clean on the floor.

For carpeting: **In those cased where infants and toddlers are allowed to play/rest on carpeted floors extra precautions need to be taken:**

- Vacuum the carpet daily
- Shampoo the carpet regularly
- Spot clean the carpet immediately when an area is visibly dirty or contaminated with vomit, feces, or urine. Spot clean the carpet with commercially available products.

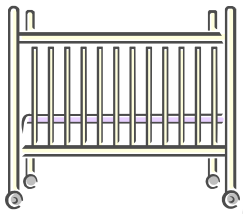

Crib with Waterproof Mattress for Infants

Family Day Care Rule: 290-2-3-.12(2)

Provision shall be made for each child to haves comfortable, clean place to nap. A crib with a waterproof mattress shall be provided for each child less than one year of age

Many providers ask.... Is a used crib safe?

Here are several safety tips for cribs:

A safe crib has:

- A firm, tight-fitting mattress
- No loose, missing or broken hardware or slats
- No more than 2 3/8 inches between the slats/bars (about the width of a soda can)
- No corner posts over 1/16 inches high
- No cutout designs in the headboard or footboard.

For mesh-sided sleeping equipment look for:

- Mesh less than ¼ inch in size, smaller than the tiny buttons on baby's clothing.
- Mess with no tears, holes or loose threads that could entangle the baby.
- Mesh securely attached to top rail and floor plate.
- Top rail cover with no tears or holes

If you plan to use a used crib, please ensure:

- The crib has not been recalled by:

U.S. Consumer Product Safety Commission
Washington, D.C. 20207
Hotline 1-800-638-2772
Website: www.cpsc.gov

- The crib has been approved by the manufacturer for sleeping and is appropriate in size for the child according to the manufacturer's specifications.

Do not use an unsafe crib or piece of sleeping equipment for children in your care.

www.cpsc.gov

Child Care Providers

Your Guide to New Crib Standards

Beginning **December 28, 2012,** any crib provided by child care facilities and family child care homes must meet new and improved federal safety standards. The new standards take effect for manufacturers, retailers, importers and distributors on **June 28, 2011,** addressing deadly hazards previously seen with traditional drop-side rails, requiring more durable hardware and parts and mandating more rigorous testing.

What you should know…

- **This is more than a drop side issue. Immobilizing your current crib will not make it compliant.**
- **You cannot determine compliance by looking at the product.**
- **The new standards apply to all full-size and non full-size cribs including wood, metal and stackable cribs.**
- **If you purchase a crib prior to the June 28, 2011 effective date and you are unsure it meets the new federal standard, CPSC recommends that you verify the crib meets the standard by asking for proof.**
  - Ask the manufacturer, retailer, importer or distributor to show a Certificate of Compliance. The document must:
    - Describe the product
    - Give name, full mailing address and telephone number for importer or domestic manufacturer
    - Identify the rule for which it complies (16 CFR 1219 or 1220)
    - Give name, full mailing address, email address and telephone number for the records keeper and location of testing lab
    - Give date and location of manufacture and testing
  - The crib must also have a label attached with the date of manufacture

What you should do…

- **All child care facilities, family child care homes, and places of public accommodation:**
  - Must prepare to replace their current cribs with new, compliant cribs before December 28, 2012.
  - Should not resell, donate or give away a crib that does not meet the new crib standards.
- **Dispose of older, noncompliant cribs in a manner that the cribs cannot be reassembled and used.**
- **Noncompliant cribs should not be resold through online auction sites or donated to local thrift stores. CPSC recommends disassembling the crib before discarding it.**

U.S. Consumer Product Safety Commission

A SAFER GENERATION OF CRIBS

New Federal Requirements

5 New Federal Requirements:

- Traditional drop-side cribs cannot be made or sold; immobilizers and repair kits not allowed
- Wood slats must be made of stronger woods to prevent breakage
- Crib hardware must have anti-loosening devices to keep it from coming loose or falling off
- Mattress supports must be more durable
- Safety testing must be more rigorous

Beginning June 28, 2011 all cribs sold in the United States must meet new federal requirements for overall crib safety.

www.cpsc.gov

SafeSleep is a campaign of the U.S. Consumer Product Safety Commission.

NSN 11-2

Hanging Cords and Other Hazards

Family Day Care Rule: 290-2-3-.11(2)(d)

Children shall not have access to hanging cords or other hazardous objects.

- Window cords and young children don't mix. From infants to preschoolers, young children are unaware and unsuspecting of the many dangers of cords.
- When cribs are placed near a window, infants may be able to pull up to nearby window cords and pull them into the cribs and around their neck and/or head.
- Toddlers and older children can become tangled in window cords.

The key to window cord safety is to reduce the child's access to the cords by:

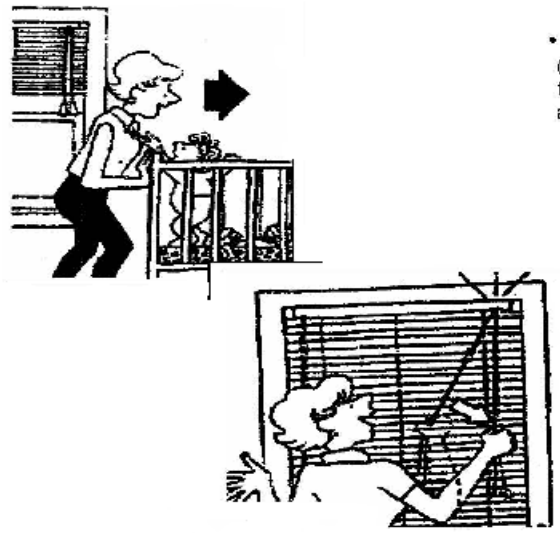

- Making sure all cribs and low-standing furniture (beds, books, toy boxes, etc.) are moved away from windows. You may want to place them against another wall.
- Locking all pull cords into position whether the blind is up or down.
- Eliminating dangling cords by securing all pull cords out of reach by using a cleat or permanent tie-down device.

- Baby bibs with string ties cannot be used. Bibs are now available with Velcro and snap fastenings. Plastic and paper disposable bibs may be used with **short** ties for fastening.
- Cable and electrical cords must be inaccessible to the children in care.
- Television and radio cords also pose a significant risk and must be secured and inaccessible to the children in care.

For more information on cord safety or to get a free cord safety kit, call the Window Covering Safety Council at 1-800-506-4636 or http://www.windowcoverings.org/

Screens and Barriers for Heating Devices

Family Day Care Rule: 290-2-3-.13(1)(e)
When in use, radiators, open fire, oil or wood burning stoves, floor furnaces and similar hazards shall have barriers or screens to prevent children from being burned

Barricades/Barriers prevent children from being accidentally burned or injured when falling towards a stove, furnace or heating device.

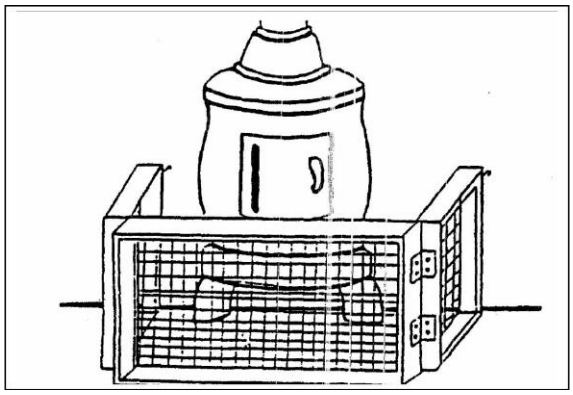

An example of a child-safe enclosure for a wood burning stove

Exposed Radiator Properly Covered

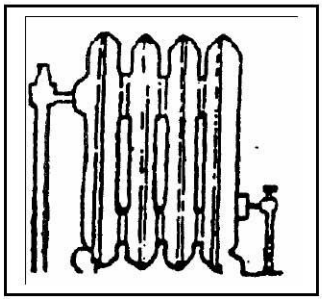

Uncovered heater

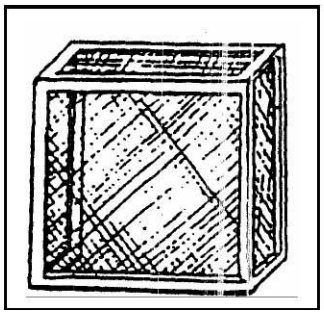

An example of a radiator cover

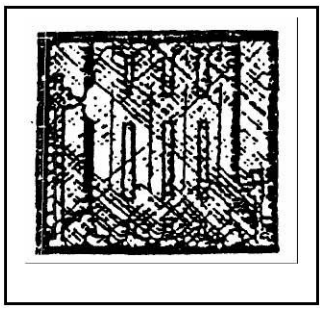

A covered radiator

Outdoor Areas Free from Hazards

Family Day Care Rule: 290-2-3-.13(2)(a) & (b)

Outside grounds and play areas shall be kept clean and free of obvious hazards to the children's health and safety. Climbing and swinging equipment shall be securely anchored to eliminate accidents or injuries.

The outdoor play area shall be clear of hazards by checking and removing or making the following items inaccessible:

- Lawn and garden tools
- Construction materials
- Un-stacked wood
- Old Cars
- Lighter Fluid/Cleaning Agents
- Broken Toys
- Barbecue equipment/Grills
- Trash that is not in closed containers
- Tree roots
- Mop Buckets/Pails

- Check and empty buckets, wading pools and any object that retains water every time it rains.

- Check and cover any protruding bolts and screws on play equipment. (Covers for protruding bolts may be plastic cups/covers available at your local hardware store)

- Check for sharp or jagged edges and rusted equipment. If the equipment is seriously rusted or has broken parts, it should be repaired or removed from the play area.

- Check storage areas such as sheds, barns or garages for poisons and other hazards.

- The best solution is to keep the outbuildings locked and inaccessible to the children.

- Check all swing S hooks to be sure they are completely closed. (Closed hooks should look like the number 8)

- Always supervise children closely when children are allowed access to swing sets.

- Do not allow children to play near the swing set when other children are swinging.

- Talk to the children about staying out of prohibited areas.

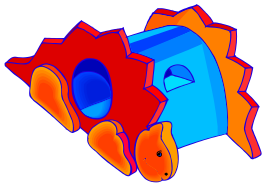

Outdoor Fencing

Family Day Care Home Rule: 290-2-3-13(c)

Such outside play areas shall be protected from traffic or other hazards by fencing or other barriers at least four feet in height and approved by the department. Fencing material shall not present a hazard to children. A fence shall be provided around swimming pools to make them inaccessible when not in use.

- Fencing is a protection for children from hazards such as swimming pools and traffic.

- Fencing around pools must be at least four feet high and meet local ordinances for swimming pools.

- If the hazard is not a pool then other barriers can be used. Such barriers may be natural or man-made. Some examples include a wall, a building, a hedge or other protective enclosure.

- You must have a fenced/approved barrier outside space for your children to play. Fencing or other approved barriers must be at least four feet high, secure, and prevent children from leaving the area.

- Fencing or any other barrier does not take the place of supervision. Providers should be with children at all times when they play outdoors. Have an answering machine or voice mail inside to answer calls when you are outdoors. You may have a wireless phone or cell phone outside with you to make calls in case of an emergency.

- Fencing should be free from openings a child can get through and from entrapment hazards (gaps less than 3 ½ inches wide).

- Fencing should be free of ready footing for climbing.

- Fencing should be free from hazards such as sharp exposed edges.

Other pool safety tips:

- Gates into the protected pool area, when the area is not in use, must be secured with a lock that a child cannot operate.

- If the pool is above ground, be sure exterior steps or ladders have been removed to make the pool inaccessible.

- Make sure the pump mechanism and other exposed pool equipment is enclosed and cannot be used as a climbing apparatus for the children to access the pool area.

FENCING

- **Provide at least a 4-foot-high fence around the play area.**

  - **Material must be non-hazardous without any protruding metal or wires.**

  The following are approved fencing materials, if they are at least 4 feet tall:

  Chain Link (with closed, bent wire- no sharp points exposed along the top)
  Wooden (no gaps between boards, no splinters)
  PVC/plastic picket fence (if gaps between pickets, must be less than 3 ½ inches)
  Wrought Iron (if gaps between rails, must be less than 3 ½ inches)

  Materials <u>not</u> approved: Barbed wire, chicken wire, farm wire (rectangular openings), lattice (plastic or wood)

- A fence must be installed to prevent a child from becoming injured or from leaving the play area by any other means than through an approved access route. The fence must be secured at the top and meet the ground and be secured at its base. Securing the base would prevent the entrance of rodents, etc.

- Any bolt used for installation should be turned toward the outside of the fence. If pointing inside, the bolts must be cut down to no more than two threads, then filed smooth or capped.

- All screws around the entrance gate can present a problem on either side.

- Any barrier other than fencing must be approved by the Department.

- Gas meters and/or heating and cooling equipment must have a secure fence or barrier around them to prevent children from having access to them. This fence or barrier must also be at least 4 feet tall.

******If barriers (i.e. landscape timbers, PVC perimeters) are added to the outdoor area to contain loose fill materials like sand/mulch, be sure that these barriers are not installed close to the fence line. The height of the barrier would reduce the overall fence height possibly causing it to be less than the minimum height of 4 feet.

PLAY EQUIPMENT AND SURFACES

- Provide enough outdoor play equipment that is age appropriate to offer a variety of activities.
- Equipment must be in safe operating condition with no rusted, broken or missing parts and no protruding nails or screws.
- Tires used for play must have holes bored in them so water drains out.
- Specific requirements for swings and climbing equipment include:
    - Must be anchored securely in the ground.
    - Chain hooks on swings must be clamped tight.
    - Slides should be installed in shaded areas.
    - Require a resilient or bouncy surface such as wood chips, sand, mulch, or pea gravel underneath and in the fall zone.
    - Height of the equipment determines the depth of the resilient surface.
    - Six inches of resilient surface is required underneath and within the fall zone of equipment five feet or higher.
    - If less than five feet, the required depth of the resilient surface is three inches.
    - Borders may be needed to maintain loose fill materials at the proper depth.
    - Any border, such as timbers or PVC pipes, built to contain the resilient surface must be installed outside of the fall zone.
- If synthetic material is used, contact the Applicant Services Unit for approval of the material prior to installation. You will be required to provide testing specifications on the product you plan to install.
- It is important to develop a system to check the playground equipment and measure resilient surface regularly to assure that both are maintained adequately.
- Safety or encroachment zones of at least 6 feet should also be created between pieces of equipment as well as between the equipment and fencing.

FALL ZONE

An area extending four feet from climbing structures; five feet from the bottom and side of exit area of a slide (other parts of the slide are climbing structures); seven feet plus the length of the chain from a swing's point of suspension in each direction; and seven feet from a merry-go-round and other revolving device.

Fall Zones – Swings

(Seven feet plus the length of the chain from swing's point of suspension, must extend in front and in back of the stationary swing)

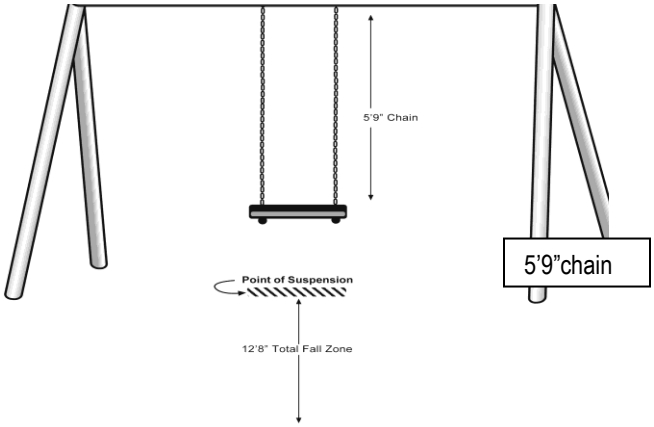

Example:
Chain = 5'9"
5'9" + 7'=12'9" fall zone
(Required in front & in back of stationary swing)

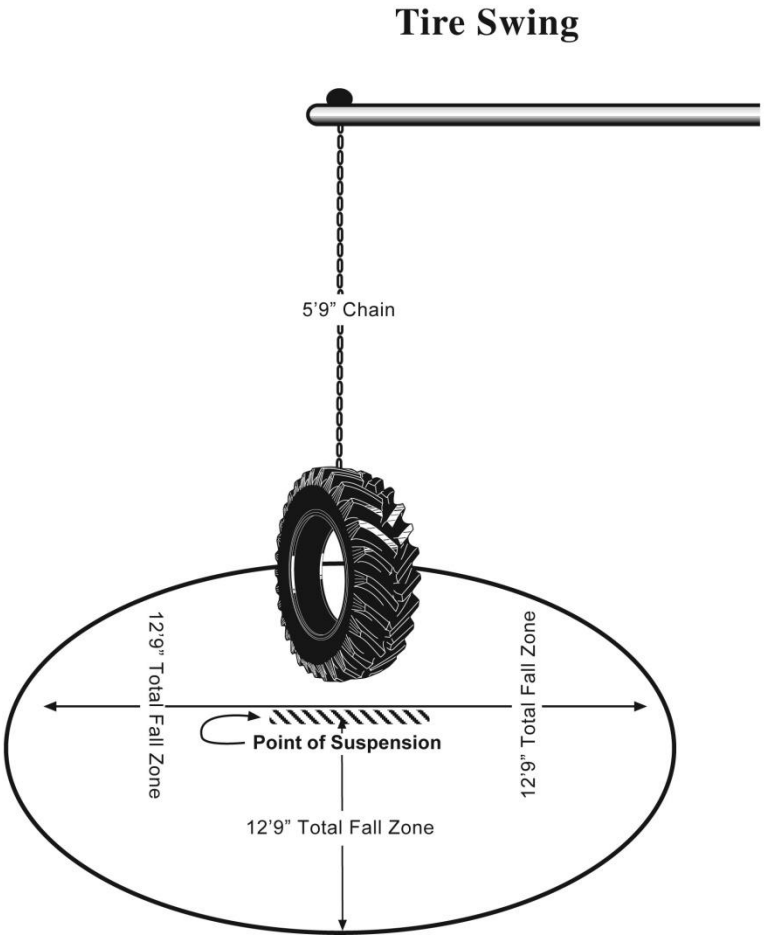

Entrapping Equipment
A component or group of components on play equipment that forms angles or openings that could entrap a child's head by being, (1) too small to allow the child to withdraw head easily, and (2) placed so that the child would be unable to support weight by means other than head or neck.

Fall Zones - Slides

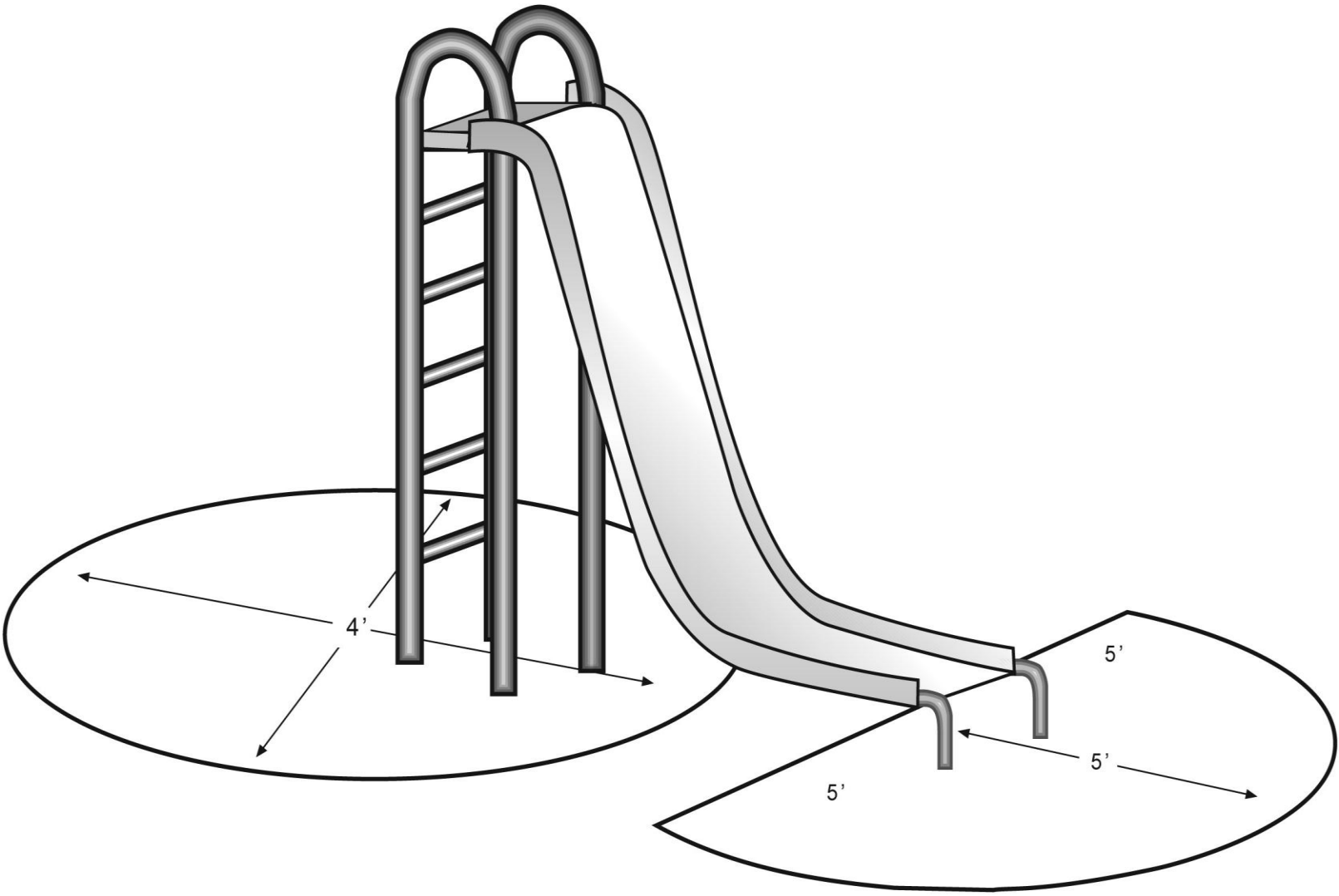

(Area extending four feet from climbing structures; five feet from bottom and sides of the exit zone of the slide.)

Fall Zones - Revolving Devices

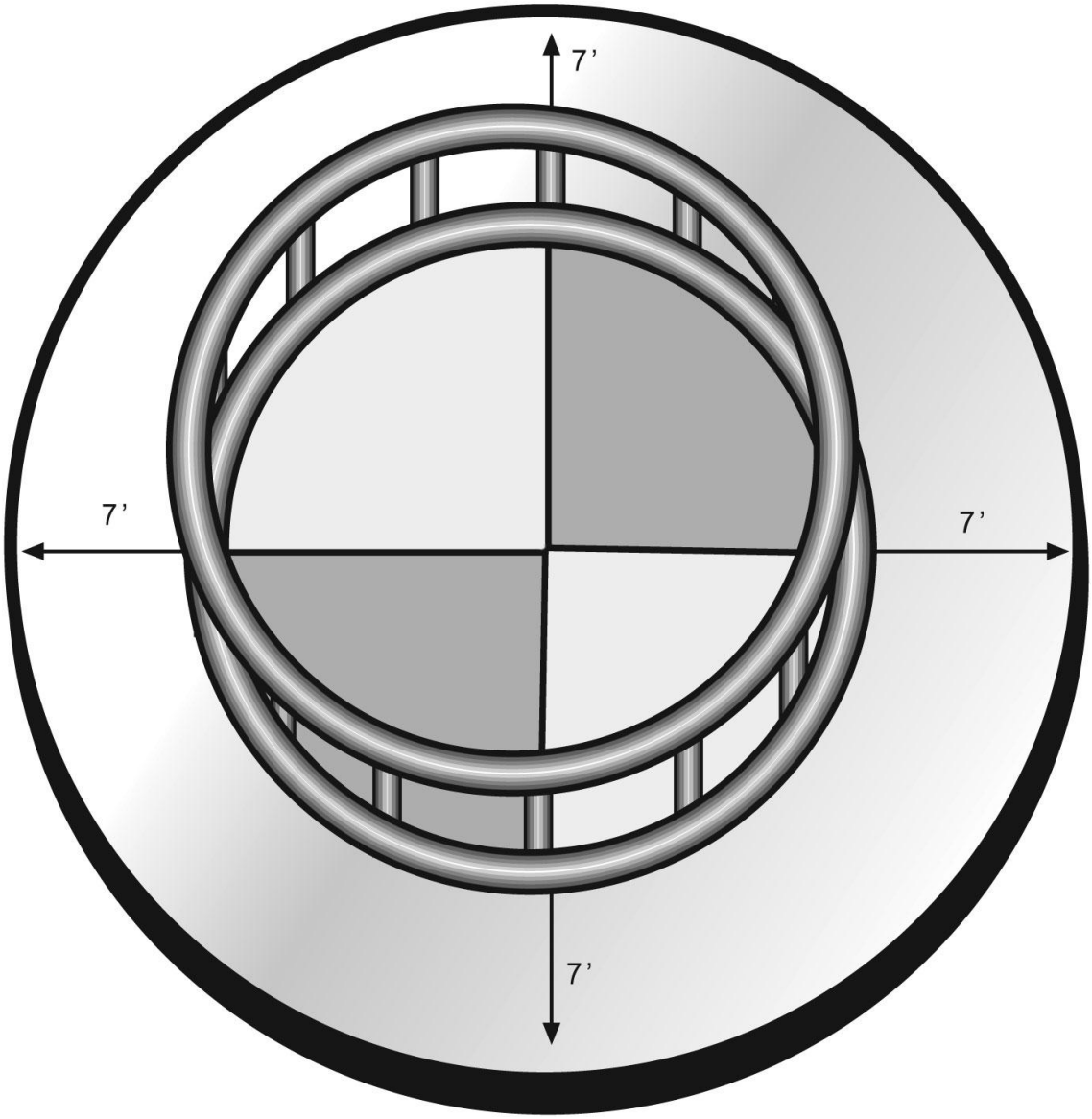

(Merry-Go-Rounds, rotating teeter totters, swing-on gates.

Supervision of Children

Family Day Care Rules: 290-2-3-.07(7)
At least one adult shall supervise children at all times.

When you provide care for other people's children, you have a responsibility to assure their safety and well-being. The most important way to do this is to provide appropriate care and supervision of all children and maintain the required adult/child ratio.

As the day care provider, you are:

- Accountable for everything that happens in your home, including those times when you leave the children in the care of your assistant or substitute.

- Responsible for providing a program that meets the developmental needs of the children in care.

- Responsible for assuring that there is appropriate supervision.

Supervision means:

- You are in the same general area as the children and immediately available to them at all times.

- You are directly overseeing the children and their activities at all times.

- You are monitoring all the children's activities by sight.

- You are outdoors with the children during outdoor play.

What is appropriate naptime supervision?

- You are awake and alert while the children nap.

- You stay on the same level of your house where children are napping.

- You keep all doors open if children nap in different rooms or areas.

- You visually check on each child several times during naptime.

You must be accessible to the children during naptime in case they have an emergency, i.e., asthma attack, breathing stops, or any other traumatic experience or in case of an emergency situation that requires evacuation, such as a fire.

GOOD HEALTH IS IN YOUR HANDS!

- Washing your hands is the simplest and most effective thing you can do to reduce the spread of colds, flu, skin infections and diarrhea.
- Every time you touch your hands to your mouth you can get sick.
- Eating, nail biting, thumb sucking, handling food, and touching toys are all ways germs can spread.
- Even shaking a hand or opening a door can transfer germs to your hands.

Always wash your hands . . .

Before

- preparing or eating food
- treating a cut or wound
- tending to someone who is sick
- inserting or removing contact lenses

After

- using the bathroom
- changing a diaper or helping a child use the bathroom (don't forget the child's hands!)
- handling raw meats, poultry or eggs
- touching pets, especially reptiles
- sneezing or blowing your nose, or helping a child blow his/her nose
- handling garbage
- tending to someone who is sick or injured

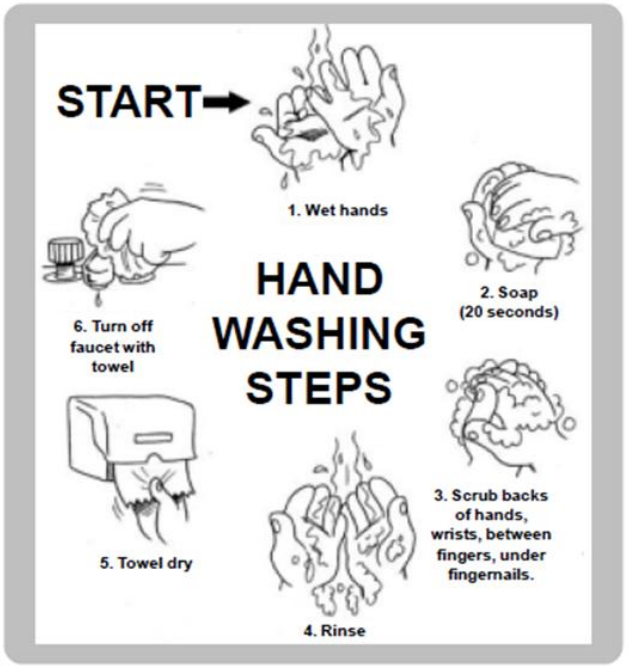

Georgia Department of Human Resources | Division of Public Health | http://health.state.ga.us

DIAPERING PROCEDURES

STEP 1

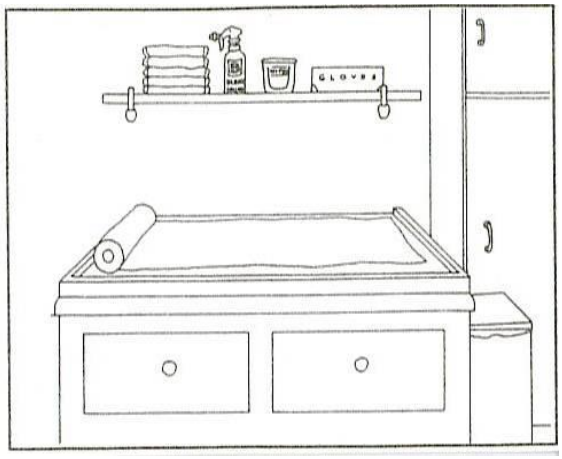

Prepare for Diapering Before Bringing Child to the Table

- Changing table paper (if used) to cover the table from the child's shoulders to feet (in case it becomes soiled and must be folded over to create a clean surface during the change)
- Enough wipes for the diaper change (including cleaning the child's bottom and the child's and teacher's hands after taking the soiled diaper away from the child's skin)
- A clean diaper, plastic bag for soiled clothes and clean clothes (if soiled clothing is anticipated)
- Non-porous gloves (if they will be used), and a dab of diaper cream on a disposable paper towel if cream is being used

Supplies should be removed from their containers and placed near, but not directly on, the diapering surface before starting the diaper change.

STEP 2

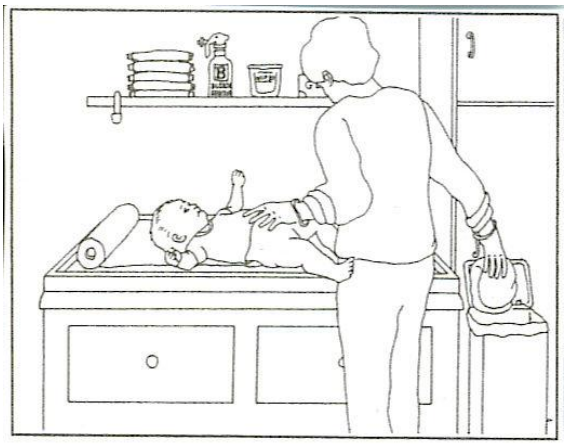

Avoid Contact with Soiled Items and Always Keep a Hand on the Child

- Place the child on diapering table. Remove clothing to access diaper. If soiled, place clothes into a plastic bag.
- Remove soiled diaper and place into a lined, hands-free trash container. (To limit odor, seal in a plastic bag before placing into trash container.)

STEP 3

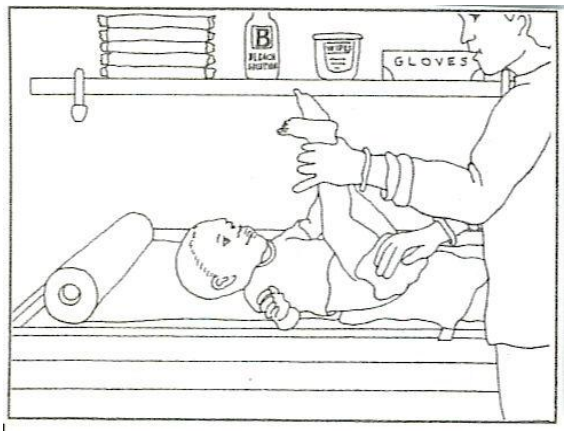

Clean the Child's Diaper Area

- Use wipes to clean child's bottom from front to back.
- Use a wipe to remove soil from adult's hands.
- Use another wipe to remove soil from child's hands.
- Throw soiled wipes into lined, hands-free trash container.

STEP 4

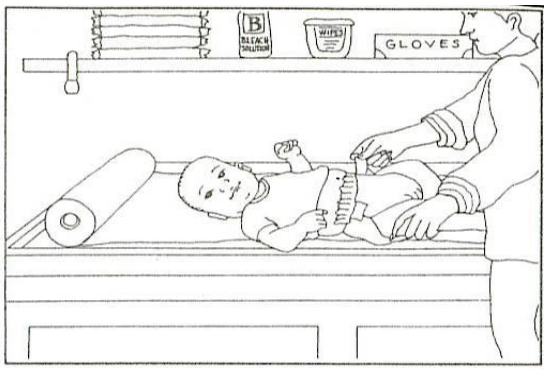

- Put on a clean diaper and redress child

Put on a Clean Diaper and Wash Child's Hands

Place the child at the sink and wash hands following the proper hand washing procedure.

STEP 5

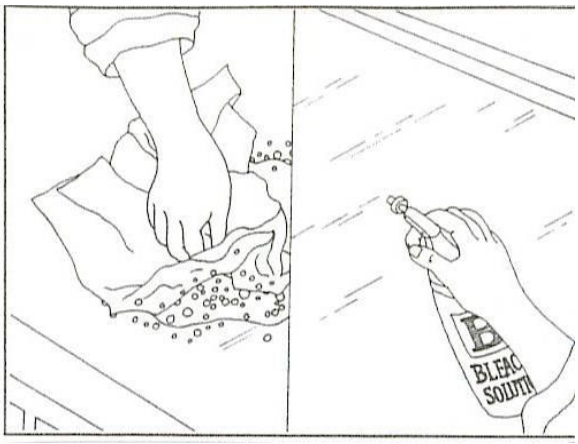

Clean and Disinfect the Diapering Area

- Clean any visible soil from the diapering table. Spray the diapering surface with bleach-water solution and wait more than 10 seconds before wiping with a disposable towel or allow to air dry.

- The recommended practice is to wait for 2 minutes to allow the solution to kill germs. However, if there is a delay of more than 10 seconds before the solution is wiped from the surface, this is considered adequate. **The surface cannot be sprayed and immediately wiped.**

- The diapering surface must be sanitized after each diaper change with a bleach-water or other approved sanitizing solution

STEP 6

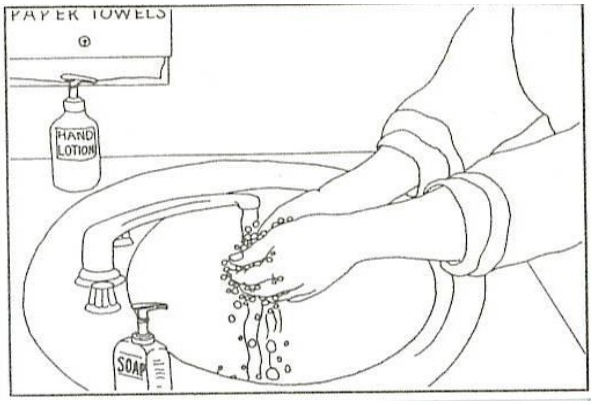

Wash Your Hands and Record in the Child's Daily Log

- Adult washes hands using the proper hand washing procedure without contaminating any other surfaces.

Additional precautions

All surfaces must be able to be sanitized- e.g., no quilted pads or safety straps, no containers that are stored on the diapering surface.

Toys that are played with or objects that are touched while children's diapers are changed must be put aside to be sanitized.

Toileting and the Toddler

Toilet learning can be a challenging subject for the child, parent or guardian, and caregiver alike - or it can be a rewarding experience for all. Knowing what to expect can help lessen some of the anxieties and make the learning fun. The following information discusses some developmental background on toilet learning, the importance of home/child care communication when toileting, and some helpful hints.

These behaviors indicate a child may be ready for toilet learning:

1. The child will have a bowel movement at a regular time.
2. The child is dry most nights.
3. The child wakes up dry from nap.
4. The child can hold urine for longer periods of time.
5. The child is around the age of 2.

If a child exhibits these indicators, then parents or guardians and caregivers should discuss starting with toilet learning. It also helps if a child shows an interest in toileting. A child must physically be capable of recognizing the internal signals that she or he is about to have a bowel movement or urinate, as well as perform the actions of holding on and expelling. Toilet learning is very individualized.

A positive relaxed approach is best, so remember:

1. Praise accomplishments and expect frequent "accidents"; mistakes will and do happen until the child is around five years old. Take these accidents in stride.
2. Waking control comes before sleeping control (plastic undies or diaper at night and nap)
3. Expect lapses, especially when a child is sick, tired, or really involved in an activity.

Helpful tips...

1. Have specific times when the child will try to eliminate.
2. Figure out if there is a pattern of elimination (always 'goes' about 9:00 and 11:30).
3. Always pre-warn the child of the upcoming event. "After you put that piece in the puzzle, it will be your bathroom turn."
4. Decorate the bathroom, making the bathroom look inviting to the children. This could include adding: colorful pictures, posters of songs, wind chimes or mobiles.
5. Acknowledge Children's Fears. Some children might be afraid of the flushing action of the toilet. Let the child practice flushing pieces of toilet paper. This is an easy way for the child to get used to the noise and the sight of things disappearing in the toilet.
6. Some children may be afraid of falling in: Have a potty chair, toilet seat adapter, or step stool available for the child to use. This will help them to feel more secure.
7. Recognize Successes (a success may be “trying” as well as “going”). Praise, Praise, Praise*:* When a child gets a positive reaction to something he/she has done, the child will be more likely to repeat that action. This holds true for toilet training, too. Praise the child when she has successfully used the toilet. But don't reprimand the child if they were not successful. Treat temporary setbacks as unfortunate happenings, NOT big mistakes!

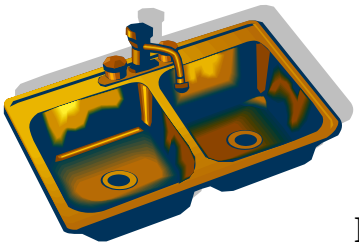

Manual Dishwashing – Chemical Method

If you do not use a dishwasher or disposable dishes the following manual dishwashing procedure must be used. If you prepare food for the children in your care, you should follow these guidelines when cleansing your cooking materials.

Approved Procedure – Pre-rinse or scrape, Washing, & Sanitizing

Pre-rinse	Scrape Dishes First, Removing All Food Items.
Wash	Wash Dishes In Water At About 100°F With A Good Detergent.
Rinse	Rinse Dishes Thoroughly In Clean Hot Water After Washing.
Sanitize	Dip Each Dish In Warm Water With 1 Tablespoon of Bleach to Each Gallon of Water. Let Dishes Soak for 2 Minutes.
Air Dry	Place Dishes in Drying Rack to Air Dry.

If you have to use your kitchen sink to wash your hands after diapering and you prepare food in your home please note:

You must sanitize the sink between each diaper change and before you begin food preparation.

Encouraging Good Food Habits

Rule 290-2-3-.10(1): Children shall be served all meals and snacks as scheduled for the period of time in which they are present. Rule 290-2-2-10(2): Meals and snacks with serving sizes dependent upon the age of the children shall be nutritious, well-balanced, and varied.

Did you know?

- For healthy growth and development, children need snacks and fluids between meals. Generally, 20% of a child's food calorie intake comes from snacks.
- Snacks can provide additional energy that children need to avoid late-morning and mid-afternoon slump
- These snacks should be carefully planned to be nutritious and age appropriate.

Why do children need snacks?

- Children's bodies have a constant need for energy replacement.
- Children's stomachs are not large enough for them to eat enough at each meal to last all the way to the next meal.
- Snacks between meals allow children to meet their basic level of calories necessary to grow, think, and play.
- Ample fluid intake throughout the day can help avoid dehydration of the child's body.

Guides for Planning Safe and Healthy Snacks…

- Mid-morning and mid-afternoon snacks should be considered an extension of breakfast and lunch. Nutrients missed during meal time can be added to a child's diet at snack time. This is why it is important to carefully plan nutritious snacks.
- Potential choking hazards exist for children under age 4 for hot dogs rounds, carrot pieces, popcorn, nuts, grapes, peanut butter, hard candy and marshmallow. Use close supervision when young children are eating.
- Infants should never be given chocolate, citrus fruit, egg whites, honey or shellfish Healthy snacks served approximately 2 hours before the next meal usually will not affect an active child's appetite
- Nuts can pose a choking hazard for children less than 4 years of age.

Snack and Mealtime can be a Learning Experience

In addition to providing a significant part of the child's daily food intake, snack time offers many interesting and important learning opportunities.

- Try new foods, and explore how they look, feel, sound, and smell.
- Develop ideas about different shapes, colors, textures, weights, amounts, etc.
- Develop social skills by talking and being with others.
- Discuss the science of food – how it is produced, how it is prepared, its importance to growth,
- Develop a willingness to try different things through eating new foods.
- Encourage age appropriate table manners.
- Share special events (birthdays, holidays, etc)
- Share with one another food that they have prepared themselves, e.g. age appropriate food preparation activities.
- Enjoy a variety of foods.

Please refer to the USDA meal guidelines on the following pages for recommended food components and serving sizes.

Infant Meal Guidelines – Ages 0-11 Months

(SEE REVERSE SIDE FOR TODDLERS)

Source: Child and Adult Care Food Program, USDA Food and Nutrition Service *Updated 9/25/00*
www.nal.usda.gov/childcare/Cacfp/index.html

BREAKFAST

Birth Through 3 Months	4 Through 7 Months	8 Through 11 Months
4-6 fluid ounces of formula[1] or breast milk[2,3]	4-8 fluid ounces of formula[1] or breast milk[2,3] 0-3 tbsp. infant cereal[1,4]	6-8 fluid ounces of formula[1] or breast milk[2,3] and 2-4 tbsp. infant cereal[1] and 1-4 tbsp. fruit and/or vegetable

LUNCH OR SUPPER

Birth Through 3 Months	4 Through 7 Months	8 Through 11 Months
4-6 fluid ounces of formula[1] or breast milk[2,3]	4-8 fluid ounces of formula[1] or breast milk[2,3] 0-3 tbsp. fruit and/or vegetable[4] 0-3 tbsp. infant cereal[1,4]	6-8 fluid ounces of formula[1] or breast milk[2,3] and 1-4 tbsp. fruit and/or vegetable and 2-4 tbsp. infant cereal[1] and/or 1-4 tbsp. Meat, fish, poultry, egg yolk, cooked dry beans or peas; or ½ -2 ounces cheese; or 1-4 ounces cottage cheese, cheese food or cheese spread

SNACK

Birth Through 3 Months	4 Through 7 Months	8 Through 11 Months
4-6 fluid ounces of formula[1] or breast milk[2,3]	4-6 fluid ounces of formula[1] or breast milk[2,3]	2-4 fluid ounces of formula[1], breast milk[2,3] or fruit juice[5] 0-1/2 bread[4,6] or 0-2 crackers[4,6]

Footnotes

1 Infant formula and dry infant cereal shall be iron-fortified.
2 It is recommended that breast milk be served in place of formula from birth through 11 months.
3 For some breastfed infants who regularly consume less than the minimum amount of breast milk per feeding, a serving of less than the minimum amount of breast milk may be offered, with additional breast milk offered if the infant is still hungry.
4 A serving of this component shall be optional.
5 Fruit juice shall be full-strength.
6 Bread and bread alternates shall be made from whole-grain or enriched meal or flour.

Toddler Meal Guidelines – Ages 1-2

Source: Child and Adult Care Food Program, USDA Food and Nutrition Service *Updated 9/25/00*
www.nal.usda.gov/childcare/Cacfp/index.html

BREAKFAST

Food Components	Ages 1-2
1 serving milk fluid milk	½ cup
1 serving fruit/vegetable juice[7], fruit and/or vegetable	¼ cup
1 serving grains/bread[8]	
bread or	½ slice
Cornbread, biscuit, roll or muffin, or	½ serving
Cold dry cereal or	¼ cup
Hot cooked cereal or	¼ cup
Pasta, noodles or grains	¼ cup

LUNCH OR SUPPER

1 serving milk fluid milk	½ cup
2 servings fruit/vegetable juice[7], fruit and/or vegetable	¼ cup
1 serving grains/bread[8]	
bread or	½ slice
Cornbread, biscuit, roll or muffin, or	½ serving
Cold dry cereal or	¼ cup
Hot cooked cereal or	¼ cup
Pasta, noodles or grains	¼ cup
1 serving meat/meat alternative	
meat, poultry or fish[9], or	1 oz
cheese or	1 oz
alternate protein product or	1 oz
egg or	½
cooked dry beans or peas, or	¼ cup
nuts and/or seeds[10], or	½ oz
Peanut or other nut or seed butters, or	2 tablespoons
Yogurt[11]	4 oz

SNACK: *Choose 2 of the 4 components*

1 serving milk fluid milk	½ cup
1 serving fruit/vegetable juice[7], fruit and/or vegetable	½ cup
1 serving grains/bread[8]	
bread or	½ slice
Cornbread, biscuit, roll or muffin, or	½ serving
cold dry cereal or	¼ cup
hot cooked cereal or	¼ cup
pasta, noodles or grains	¼ cup
1 serving meat/meat alternative	
meat, poultry or fish[9], or	½ oz
alternate protein product or	½ oz
cheese or	½ oz
egg or	½
cooked dry beans or peas, or	1/8 cup
nuts and/or seeds, or	½ oz
peanut or other nut or seed butters, or	1 tablespoon
yogurt[11]	2 oz

Footnotes

7 Fruit or vegetable juice must be full-strength. Juice cannot be counted as the second snack-item if the other snack-item is milk.
8 Breads and grains must be made from whole-grain or enriched meal or flour. Cereal must be whole-grain or enriched or fortified.
9 A serving consists of the edible portion of cooked lean meat or poultry or fish.
10 Nuts and seeds may comprise only half of a meat/meat alternative serving and must be combined with another meat/meat alternative to fulfill the lunch or supper requirement.
11 Yogurt may be plain or flavored, unsweetened or sweetened.

Meal Guidelines – Ages 1-12

Source: Child and Adult Care Food Program, USDA Food and Nutrition Service *Updated 9/25/00*
www.nal.usda.gov/childcare/Cacfp/index.html

BREAKFAST

Food Components	Ages 1-2	Ages 3-5	Ages 6-12[1]
1 serving milk fluid milk	½ cup	¾ cup	1 cup
1 serving fruit/vegetable juice[2], fruit and/or vegetable	¼ cup	½ cup	½ cup
1 serving grains/bread[3]			
bread or	½ slice	½ slice	1 slice
Cornbread, biscuit, roll or muffin, or	½ serving	½ serving	1 serving
Cold dry cereal or	¼ cup	1/3 cup	¾ cup
Hot cooked cereal or	¼ cup	¼ cup	½ cup
Pasta, noodles or grains	¼ cup	¼ cup	½ cup

LUNCH OR SUPPER

1 serving milk fluid milk	½ cup	¾ cup	1 cup
2 servings fruit/vegetable juice[2], fruit and/or vegetable	¼ cup	½ cup	¾ cup
1 serving grains/bread[3]			
bread or	½ slice	½ slice	1 slice
Cornbread, biscuit, roll or muffin, or	½ serving	½ serving	1 serving
Cold dry cereal or	¼ cup	1/3 cup	¾ cup
Hot cooked cereal or	¼ cup	¼ cup	½ cup
Pasta, noodles or grains	¼ cup	¼ cup	½ cup
1 serving meat/meat alternative			
meat, poultry or fish[4], or	1 oz	1½ oz	2 oz.
alternate protein product or	1 oz	1½ oz	2 oz.
cheese or	1 oz	1½ oz	2 oz.
egg or	½	¾	1
cooked dry beans or peas, or	¼ cup	3/8 cup	½ cup
nuts and/or seeds[5], or	½ oz	¾ oz	1 oz.
Peanut or other nut or seed butters, or	2 tablespoons	3 tablespoons	4 tablespoons
Yogurt[6]	4 oz	6 oz	8 oz.

SNACK: *Choose 2 of the 4 components*

1 serving milk fluid milk	½ cup	½ cup	1 cup
1 serving fruit/vegetable juice[2], fruit and/or vegetable	½ cup	½ cup	¾ cup
1 serving grains/bread[3]			
bread or	½ slice	½ slice	1 slice
Cornbread, biscuit, roll or muffin, or	½ serving	½ serving	1 serving
cold dry cereal or	¼ cup	1/3 cup	¾ cup
hot cooked cereal or	¼ cup	¼ cup	½ cup
pasta, noodles or grains	¼ cup	¼ cup	½ cup
1 serving meat/meat alternative			
meat, poultry or fish[4], or	½ oz	½ oz	1 oz.
alternate protein product	½ oz	½ oz	1 oz.
cheese or	½ oz	½ oz	1 oz.
egg or	½	½	½
cooked dry beans or peas, or	1/8 cup	1/8 cup	¼ cup
nuts and/or seeds, or	½ oz	½ oz	1 oz.
peanut or other nut or seed butters, or	1 tablespoon	1 tablespoon	2 tablespoons
yogurt[6]	2 oz	2 oz	4 oz.

Footnotes

1 Children age 12 and older may be served larger portions based on their greater food needs. They may not be served less than the minimum quantities listed in this column.
2 Fruit or vegetable juice must be full-strength. Juice cannot be counted as the second snack-item if the other snack-item is milk.
3 Breads and grains must be made from whole-grain or enriched meal or flour. Cereal must be whole-grain or enriched or fortified.
4 A serving consists of the edible portion of cooked lean meat or poultry or fish.
5 Nuts and seeds may comprise only half of a meat/meat alternative serving and must be combined with another meat/meat alternative to fulfill the lunch or supper requirement.
6 Yogurt may be plain or flavored, unsweetened or sweetened.

Georgia Child Restraint Information Sheet

Rule: 290-2-3-.11(2)(j) If children are transported in an automobile by the provider or a home's employee, the driver should have a current driver's license and children shall be restrained by either individual seat belts or appropriate child restraints in accordance with state laws. No child shall be left unattended in a motor vehicle.

Who must buckle up?

Ga. L. 2000, pg. 763, Code 40-8-76, item B (b)(1) Every driver who transports a child under six years of age in a passenger automobile, van, or pickup truck, other than a taxicab as defined by Code Section 33-34-5.1 or a public transit vehicle as defined by Code Section 16-5-20, shall, while such motor vehicle is in motion and operated on a public road, street, or highway of this state, provide for the proper restraint of such child in a child passenger restraining system appropriate for such child's height and weight and approved by the United States Department of Transportation under provisions of Federal Motor Vehicle Safety Standard 213 in effect on January 1, 1983 with a few exemptions.

Changes to child restraint law (40.8.76) and seat belt law (40.8.76.1) as a result of HB 217 went into effect on July 1, 2004.

Child Restraint Law - 40.8.76
Requires appropriate restraint use for all children under 6 in a passenger automobile, van or pick-up truck.

Vehicles exempted:
• taxi cabs;
• public transportation;
• until July 1, 2007 vans that are used for the transportation of children over 4 years of age that are operated by licensed or commissioned child care facility, with a current annual transportation safety inspection certificate and evidence of being inspected for use by a child care facility. However, children age 5 must be properly restrained by a safety belt, and;
• multifunction school activities buses, as defined in the Federal Register, for children age 5.

Exceptions:
• a lap belt may be used for children weighing at least 40 pounds when the vehicle is not equipped with both lap and shoulder belts, or;
• lap and shoulder belts are being used to properly restrain other children;
• if a parent can show that the child's height is over 4'9", the child must be in a safety belt.

Children under 6 must be in the rear seat unless:
• there is no rear seating position, or;
• all appropriate rear seating positions are occupied by other children;
• children in the front seat must be properly restrained in an appropriate seat used according to the manufacturer's instruction.

Safety Belt Law 40.8.76.1(e)(3)
Each minor six years of age or older who is an occupant of a "passenger vehicle" must be restrained by a safety belt.
"Passenger vehicles" are defined as every motor vehicle designed to carry 10 or less and includes pick-up trucks for occupants less than 18 years.

Guidelines for Positive Discipline

290-2-3-.11(3) Disciplinary actions used to correct a child's behavior, guidance techniques and any activities in which children participate or observe at the home shall not be detrimental to the physical or mental health of any child.

Positive discipline is a guidance process that helps children:

• Learn to make positive choices. • Learn problem-solving skills.
• Learn basic human values of respect, trust, responsibility, honesty and care for others.
• Learn to self-regulate.

To help obtain these goals you can:

• Focus on the child's immediate environment. • Understand children's differences.
• Anticipate and prevent potential problem/situations.
• Create rules and routines based on the children's needs. Familiar routines and a clear set of rules fairly and consistently enforced, let children know what you expect and that enables them to experience a greater sense of independence and competence. By anticipating problems and setting rules (if necessary) to avoid them, you cut down on the need for "behavior management."

When rules are no longer needed, change or eliminate them:

• Be consistent in using positive communications. Offer encouragement, not empty praise.
For example, "You remembered to clean up your place at the table today." Rather than,
"What a good girl you were today!"
• Provide information rather than just stating rule, but make it short and specific. For example, "Hang up your coat, so people won't walk on it and get it all dirty." Rather than: "Hang your coat up!"
• Focus on children's feelings and the actions that result, not on the children themselves. For example, "What made you feel so angry with Patrick that you felt like hitting him?" Rather than, "Don't hit! Bad boy!"
• Focus children's attention on a positive event to come rather than the present disagreeable task. For example, "As soon as you pick up the blocks you were playing with, you can join us outside". Rather than, "Hurry up and pick up those blocks!"
• Focus on positive behavior in the group rather than negative ones. For example, "Almost everyone remembered to push in chairs today!" Rather than, "Some people are still forgetting to push in chairs!"
• When there is damage to materials or equipment, focus on how it affects the group rather than look for the "culprit".
• Tell children exactly what you expect and express confidence that children will follow.
• When children are upset, respond to the feelings underlying their threats and not the threats themselves. However, do not assume that you know what each child is feeling and be aware that the child may not 'know' why he/she is upset.
• Give children choices when there are genuine choices. Part of respecting children is giving them choices whenever possible. Example, "Do you want to sit in a chair to put on your shoes, or on the floor?"

Redirect the child's attention. Sometimes this involves telling the child what behaviors are acceptable.

• Settle problems quickly and follow through completely. If a child refuses to choose among options available to them, you need to choose for them. For example, "It looks like you can't decide whether you're going to put your shoe on or not. I can't spend any more time waiting for you to decide. You may sit over here out of the way while you're deciding what to do".

Logical and Natural Consequences: A logical consequence should match the unacceptable behavior.

• Explain limits and consequences ahead of time.
• Establish consequences based on appropriate expectations for that child.

• Respect the child.
• Make statements in a calm non-threatening way.
Example: “Yes, I know that you enjoy art time. I’m sorry you are missing it, but you scatter these toys all over the classroom and it takes a long time to put them back where they belong.”

Use of time out:
• Time out can be useful if it is a cooling-off period rather than a punishment. Children sometimes need a quiet place they can go to for a few moments to calm down. They can rejoin the group when they are ready.
• A structured time out is used to help children calm down when they cannot do it without help. The time out should be a specific place, where there are no activities to do.
• Time out should always be short giving the child one minute per year in age to think about their actions, e.g. 2 years old no more than two minutes away from the group and under proper supervision.

Positive steps in conflict resolution:
• Anticipate and eliminate potential problems.
• Have a well-planned daily schedule.
• Redirect the children.
• Model appropriate behavior for the children.
• Provide individualized attention to help the children deal with particular situations.
• Focus on behavior and not on the child. If you are angry with a behavior, let the child know that you like them, but you did not like his/her behavior.

Inappropriate forms of discipline:
• Never punish children.
• Never shame child.
• Corporal punishment is forbidden. This means no:
1. Striking, kicking or popping a child.
2. Shaking, pulling or pushing a child.
3. Grabbing a child by the hair or ears.
4. Pinning the child to the floor or against the wall.
5. Sitting on a child.
6. Squeezing a child across the throat or lower abdomen, which may make it difficult for the child to breathe.
7. Forcing the child to eat an unpleasant substance like soap.
8. Giving a child permission to do any of the above to another child.

Please….Don't Shake The Baby

What is Shaken Baby Syndrome?
It is a condition caused by shaking a baby so hard that the baby's head flops back and forth. This is not an injury that happens when you are casually playing with a child.

What happens to children who are shaken violently?
They may go blind or have brain damage leading to a number of severe, lifelong disabilities. They may even die.

When and why does it happen?
Crying seems to be what most often pushed caregivers over the edge into hurting children. Babies cry for many reasons. Most of the time, you can calm them by feeding them, rocking them or changing their diapers. But, when babies cry for a long time and cannot be quieted, you can get frustrated. You may feel like shaking the baby hard trying to make them be quiet, which upsets the child more; the crying continues and injuries result from the baby being shaken.

What can you do when a baby cries?
• Feed the baby slowly, and burp him by patting gently on his back.
• Hold the baby against your chest and walk or rock him.
• Offer the baby a pacifier.
• Put on soft music and sing.
• Place the baby into a baby swing for a short time.
• Take the baby's temperature. If he/she has a fever, call the parent.

When nothing works. . .
• Lay the baby on his/her back, in the crib, away from the other children.
• Take a break, calm yourself and get control.
• Check the child's body for a physical injury that may have occurred when you were looking away from the child.

BITING

What Can I Do To Stop It?
There is no quick cure.
Your most valuable assets as a caregiver are a calm approach and patience.

The following scenarios are from the Division of Child Day Care Licensing, Michigan Department of Consumer and Industry Services:
Angela is a year and a half old and is getting ready to go outside. This is her favorite part of the day. As the children gather by the door, Angela is squealing with delight. She looks over at two year old Kevin and bites his shoulder. He screams, which surprises Angela, and she begins to cry.

Three-year-old Adam is playing with the Lego's. As he bends down to pick up one of the pieces that just fell on the floor, Tamika (2 ½ years) walks up and takes two of the Lego's off the table. When Adam sees this, he begins shrieking at the top of his lungs. Tamika is frozen in shock; a split second later Adam is lunging forward and sinking his teeth into Tamika's arm. She drops the Lego's and runs crying to her caregiver.

Do these young children really want to hurt the children they play with? Are these mean, cruel, intentional acts of aggression? Chances are, no. Biting happens in almost every day care center and home that cares for young children.

To be successful child care providers, we must
- recognize children's reasons for biting,
- react appropriately, and.
- take proper measures to prevent further incidents.
- working with parents is essential.

Why Do Young Children Bite?
Biting is a natural part of children's development.
Infants and toddlers put everything in their mouths. It feels good to bite and chew while you're teething. Toddlers and young preschoolers don't have the verbal skills to fully express themselves. Biting brings about a quick and dramatic response. Children experience many emotions (positive and negative) that are difficult for them to express and, at times, control. These emotions can be caused by numerous things, such as: over excitement, frustration, fatigue, and fear of being separated from people they love.

How Can I Prevent Biting?
A good program that meets the needs of children and has a lot of equipment is the key to minimizing biting!

Look around your home or center.

Is there enough space for children to move around without bumping into each other?
Are there enough toys for each child to have several to choose from at any one time?
Do you have enough activities planned to keep the children involved and interested?
A conflict over a toy or personal space can be enough to cause a child to bite.

Know the temperaments of the children you care for.

Children may be more likely to bite if:
They are more aggressive and physical or
They have difficultly expressing their feelings in words

Look for pattern in a frequent biter.

Are there particular times of the day in which the biter has difficulty? Be there ahead of those times. Does the biter focus on one child? You may want to keep them separated as much as possible. Do toys seem to be the cause of many biting incidences? You may need more (or duplicate) toys so every child has several to choose from at any one time.

Encourage the use of words to express feelings and emotions.

Help children understand that words can be used to express feelings. You may need to teach the children words that are appropriate. Children who can verbally express themselves will be less likely to lash out physically.

Recognize good behavior when it happens.

Most children look for attention. If they get it during positive behaviors, they will be more likely to continue those behaviors.

How Should I React?

Remember, biters are usually looking for help and/or attention. Expect that biting may occur at some time with every infant or toddler. Your task is to carefully and thoughtfully handle the situation, and move on, so not to reward the child with your attention.

STOP the action. Say, "NO"!

Quickly assess the situation to determine the cause of the biting.

- Is the infant hungry or teething? Do I have something appropriate for the infant to chew?
- Attend to the victim. Wash area with soap and water, apply cold compress if swollen, comfort child.
- Talk to the biter: Tell the biter, "Biting hurts! Teeth are not for biting children. Teeth are for eating food." If you think the child bit for emotional reasons, you can say, "It's o.k. to be upset (mad, frustrated, excited, etc.). "It's not o.k. to bite." Tell the child what he/she can do next time they experiences this emotion (i.e., you can say 'My toy!!' or 'You can call my name and I will come help you").
- If it is an older child, you can ask them what a better solution might have been.
- Redirect the child to another area. This might mean feeding the child, putting her down for a nap, or involving them in another toy or activity. Stay with that child until he/she becomes involved in the new activity.
- Finish the interaction on a positive note. Reassure the biter that he/she is still important to you and that you still care about them.

As A Caregiver, NEVER

- Bite the child back
-Encourage the victim to bite the child
- Humiliate the child

How Should I Inform The Parents?

Let the parents know that biting is a normal part of children's development. Inform them of your policy before any incidents occur.

Biter's Parents:

- Inform parents that their child bit someone.
- Stress the severity or mildness of the incident.
- Assure parents that you have taken care of the situation, and further reprimands are not necessary.
- If this is a recurring problem, work with the parents or a plan of action that will be reinforced in the home.

Victim's parents:

- Inform parents that their child was bitten.
- Assure parents that you have taken care of the situation and that you are taking measures to prevent further incidents.
- Explain to them what your plan of action is if they ask.

What If I've Tried It All And Nothing Is Working?

It is your job as a caregiver to insure the safety of all children in your care. If one child is jeopardizing the safety of others by frequently biting, action must be taken. Sometimes no matter how hard you try to fix the situation and no matter how patient you are, a child may just not be a good match with your program. After talking to the parents, the best thing for the child may be to move him/her to a new child care setting. As this can be very upsetting for the child and his/her parents, it is important to be helpful and compassionate. Remember, this should be your last resort, after exhausting all other possibilities.

Successful Coping And Prevention Will Depend On:

- A well rounded and equipped program
- Appropriate supervision
- Your knowledge of and experience with children's development
- Your reaction to the incident(s)
- Your follow though
- Parental reinforcement of the techniques used.

Fire Drills and Fire Extinguishers

Suggestions for Fire Drills

- Check you child care area and locate two possible exit routes for each room.
- Plan a meeting place outside the house that is away from the both the house and the area where fire engines would park.
- Practice the fire drill escape every month with the children - even the little ones who are too young to really understand.
- You can make the practice into a game (like, Join the Train, Hop on Board, Follow the Leader, etc.). Games make the fire drills practices fun and less scary for the children.
- Teach older children how to crawl low where the cleanest air is and to feel the door before they open it.
- For children who cannot walk:
  a. Place the infants in a crib with rollers.
  b. If the children can sit alone, place the children in the "fire wagon."
  c. Use an "emergency quilt" (a large blanket, sheet," etc.).
  Place quilt on the floor, put babies into center, and pull up comers to carry out.
- Let parents know what you are doing so they can work with the children at home.

P A S S -- Pull, Aim, Squeeze, and Sweep

Pull the pin at the top of the extinguisher that keeps the handle from being accidentally pressed.

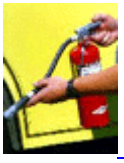

Aim the nozzle toward the base of the fire.

Stand approximately 8 feet away from the fire and **squeeze** the handle to discharge the extinguisher. If you release the handle, the discharge will stop.

Sweep the nozzle back and forth at the base of the fire. After the fire appears to be out, watch it carefully since it may re-ignite!

Congratulations -- you did it!!!

CHILD CARE RESOURCE AND REFERRAL DIRECTORY

GEORGIA'S PARENT CHILD CARE REFERRAL SYSTEM
Statewide Number: 1-877-ALL-GA-KIDS (1-877-722-2445 or 404-479-4240)
Website: www.allgakids.org

Operated by: ***Quality Care for Children***
50 Executive Park South, Suite 5014
Atlanta, GA 30329
Contact: Pam Runkle (404) 479-4233 or 1-877-722-2445 Fax: (404) 479-4166
Email Address: pam.runkle@qualitycareforchildren.org
Reynaldo Green (404) 479-4203
Email Address: reynaldo.green@qualitycareforchildren.org

Region 1: Child Care Resource and Referral Agency of North Georgia
Quality Care for Children, Inc.
913 N. Tennessee Street, Suite 202, Cartersville, GA 30120
Contact:Gloria Calhoun: (770) 387-0828 or Toll Free (800) 308-1825 Fax: (678) 721-6676
Email Address: gloria.calhoun@qualitycareforchildrennwga.org
Website: www.qualitycareforchildren.org
Counties: Bartow, Carroll, Catoosa, Chattooga, Cherokee, Cobb, Dade, Dawson, Douglas, Fannin, Floyd, Forsyth, Gilmer, Gordon, Habersham, Haralson, Lumpkin, Murray, Paulding, Pickens, Polk, Rabun, Towns, Union, Walker, White, Whitfield.
27 Counties

Region 2: Child Care Resource and Referral Agency of Metro Atlanta
Quality Care for Children, Inc.
50 Executive Park South, Suite 5015, Atlanta, GA 30329
Contact: Pam Runkle (404) 479-4233 or 1-877-722-2445 Fax: (404) 479-4166
Email Address: pam.runkle@qualitycareforchildren.org
Website: www.qualitycareforchildren.org
Counties: Dekalb, Fulton **2 Counties**

Region 3: Child Care Resource and Referral Agency of the Central Region at Macon
Medical College of Georgia
277 Martin Luther King Jr. Blvd, Suite 104, Macon, GA 31201
Contact:Julie Phillips (478) 751-3000 or 1-877-228-3566 Fax (478) 751-3010
Email Address: jphillips@mcg.edu
Website: www.mcg.edu/ccrr
Counties: Baldwin, Bibb, Butts, Clayton, Coweta, Fayette, Glascock, Greene, Hancock, Heard, Henry, Jasper, Jefferson, Jones, Lamar, McDuffie, Monroe, Newton, Pike, Putnam, Rockdale, Spalding, Taliaferro, Twiggs, Warren, Washington, Wilkinson
27 Counties

Region 4: Child Care Resource and Referral of Southwest Georgia at Albany
Darton College
2429 Gillionville Rd., Albany, GA 31701
Contact:Soraya Kimbrel-Miller (229) 317-6834 or Toll Free (866) 833-3552 Fax (229) 317-6968
Email Address: soraya.kimbrel@darton.edu
Website: http://ccrr.darton.edu/
Counties: Atkinson, Baker, Ben Hill, Berrien, Bleckley, Brooks, Calhoun Chattahoochee, Clay, Coffee, Colquitt, Cook, Crawford, Crisp, Decatur, Dodge, Dooly, Dougherty, Early, Grady, Harris, Houston, Irwin, Lanier, Lee, Lowndes, Macon, Marion, Meriwether, Miller, Mitchell, Muscogee, Peach, Pulaski, Quitman, Randolph, Schley, Seminole, Stewart, Sumter, Talbot, Taylor, Telfair, Terrell, Thomas, Tift, Troup, Turner, Upson, Webster, Wilcox, Worth **52 Counties**

Region 5: Child Care Resource and Referral Agency of Southeast Georgia at Savannah
Savannah Technical College
190 Crossroads Parkway Savannah GA 31407
Contact:Sherry Costa (912) 443-3011 or 1-877-935-7575 Fax 912-966-6735
Email Address: scosta@savannahtech.edu
Website: http://www.ccrrofsoutheastga.org/
Counties: Appling, Bacon, Brantley, Bryan, Bulloch, Burke, Camden, Candler, Charlton, Chatham, Clinch, Columbia, Echols, Effingham, Emanuel, Evans, Glynn, Jeff Davis, Jenkins, Johnson, Laurens, Liberty, Long, McIntosh, Montgomery, Pierce, Richmond, Screven, Tattnall, Toombs, Treutlen, Ware, Wayne, Wheeler
34 Counties

Region 6: Child Care Resource and Referral Agency of East Georgia
Quality Care for Children, Inc.
277 Martin Luther King Jr., Blvd., Suite 104, Macon, GA 31201
Contact:Lisa Bledsoe: (478) 752-7800 or Toll Free (800) 558-4804 Fax (478) 752-7796
Email Address: lisa.bledsoe@qualitycareforchildren.org
Website: www.qualitycareforchildren.org
Counties: Banks, Barrow, Clarke, Elbert, Franklin, Gwinnett, Hall, Hart, Jackson, Lincoln, Madison, Morgan, Oconee, Oglethorpe, Stephens, Walton, Wilkes
17 Counties

Family Day Care Home Food Sponsors

http://www.decal.ga.gov/Nutrition/Search.aspx?source=green

Care & Share (04366)
Contact Person: Rev. James Lawson
197 McNutts Creek Place
Athens, GA 30606
inzozo@bellsouth.net
(706) 548-5197
(706) 548-8924 FAX
Regions Served: Northwest and Central Georgia

Community Child Care Food Supplement, Inc. (04299)
Contact Person: Ms. Barbara Williams
& Ms. Theresa Brack
5859 Abercorn Street, Suite 8
Savannah, GA 31405
inccommunity@bellsouth.net
(912) 443-9995,exts. 107 (Brack), 13 (F. Williams), 14 (Hamilton), 15 (B. Williams)
(912) 354-6752 FAX
Regions Served: Central and Southwest Georgia

Jeff Davis County Medical Center
dba Family Day Care Network (04266)
Contact Person: Mrs. Lynn Spell & Ms. Saralyn Overstreet
92 South Williams Street, Ste. 1
Post Office Box 395
Hazelhurst, GA 31539
(912) 375-4895
(912) 375-4895 FAX
Regions Served: Southwest and Southeast Georgia

Georgia Child Care Resources, Inc
(03812-B)
Contact Person: Dr. Brenda Weitman
203 South Laurel St., Suite 202
P.O. Box 1026
Springfield, GA 31329
bcweitman@aol.com
(912) 657-4806
(912) 754-9936 Fax
Regions Served: Southwest/Coastal GA

Community Family Day Care, Inc. (04296)
Contact Person: Mrs. Wilbertine Benton-Calhoun
215 Lakewood Way, Suite 104-D, SE
Post Office Box 6925
Atlanta, GA 30315
cfdcfoodprogram@bellsouth.net
(404) 627-7565
(404) 627-2530 FAX
Regions Served: Northwest and Central Georgia

Community Improvement Coalition of Monroe County (04241)
Contact Person: Ms. Annette Lucear
143 Powerhouse Road
P.O. Box 1241
Forsyth, GA 31029
AnnetteLucear@hotmail.com
(478) 994-9278
(478) 994-4592 FAX
Regions Served: Central Georgia

Georgia Resources for Children, Inc. (DCH) (04960-B)
Contact Person: Ms. Brenda Chambers& Jill
P.O. Box 1405
Chatsworth, GA 30705
georgiaresourcesforchildren@yahoo.com
(706) 695-4206
(706) 695-4216 FAX
Regions Served: Northwest, Northeast and Central Georgia

Gwinnett Children's Food Umbrella, Inc. (04342)
Contact Person: Ms. Linda Bazemore
315 Highway 124
Lawrenceville, GA 30045
gcfu1@bellsouth.net
(770) 339-4414
(770) 339-4406 FAX
Regions Served: Northeast and Central Georgia

Georgia Nutritional Services, Inc. (04661)
Contact Person: Ms. Deborah Gillison-Wilson
P.O. Box 88567
Atlanta, GA 30356
cacfp@ganutrition.comcastbiz.net
(770) 860-0509
(770) 986-7865 FAX
Regions Served: Northeast and Central Georgia

Georgia Premier Providers (04590)
Contact Person: Mr. Humphrey Mbadugha & Allison
974 Klondike Court, SW, Suite 102
Conyers, GA 30094
hmbadugha@yahoo.com
(770) 760-1911
(770) 760-7909 FAX
Regions Served: Central Georgia

Quality Care for Children (04867)
Contact Person: Ms. Judy Pittman & Ms. Jean Stephenson
50 Executive Park South, Suite 5015
Atlanta, GA 30329-2214
jean.stephenson@qualitycareforchildren.org
(404) 479-4251 Judy direct
(404) 479-4253 Jean direct
(404) 479-4200 Main
(404) 479-4166 FAX
Regions Served: Entire State of Georgia

Supportive Nutritional Aid (DBA) SNAP, Inc. (04317)
Contact Person: Ms. Bertressia Patterson
P.O. Box 796
Jonesboro, GA 30237
Homes@snapcacfp.com (770) 477-4844
(770) 477-4875 FAX
Regions Served: Central Georgia

Healthy Choice Nutritional Program, Inc. (04987)
Contact Person: Mrs. Brenda Mott-Morris & Nicole
3554 Hilton Avenue
Columbus, GA 31904
bmmb98@aol.com
(706) 653-5420
(706) 653-5423 FAX
Regions Served: Central, Southwest and Southeast Georgia

Home Care Associates, Inc. (04309)
Contact Person: Ms. Barbara Drummond
477 Windsor Street, Room 308
Atlanta, GA 30312
SBargedrum@aol.com
(404) 523-2692
(404) 635-0641 FAX
Regions Served: Northwest, Northeast, and Central Georgia

The Childcare & Nutritional Association (04275)
Contact Person: Ms. Dorothy Shorter
Post Office Box 90399
East Point, GA 30364-0399
can_a@bellsouth.net
(404) 559-1911
(706) 456-3066 Alternate
(404) 765-9178 FAX
Regions Served: Entire State of Georgia

TKT Family Resources, Inc. (04843)
Contact Person: Mr. Terry Foxx
P.O. Box 490096
Lawrenceville, GA 30049
tfoxx1435@wmconnect.com
(770) 338-5068
(770) 338-2602 FAX
Regions Served: Northwest, Southwest, Southeast and Central Georgia

FAMILY DAY CARE HOME
CHILDREN'S ENROLLMENT RECORD

CHILD'S INFORMATION		
Child's Full Name:		**Child Resides with:**
Nickname:		
Date of Birth:		**Child's Age:**
Child's Home Address: **(Include Number and Street Name)**		
City/State/Zip:		

OTHERS AUTHORIZED TO PICK UP CHILD FROM FAMILY DAY CARE HOME
For your child's safety, I only allow children to leave my home with you (the person enrolling the child) and the person(s) you have specified below (One person should be listed that is not a parent/guardian). Changes to this list must be made in writing.

Name:		**Name:**	
Address:		**Address:**	
City/State/Zip:		**City/State/Zip:**	
Telephone:		**Telephone:**	
Relationship to Child		**Relationship to Child**	
Relationship to Parent(s)		**Relationship to Parent(s)**	

PARENT(S)/GUARDIAN(S) INFORMATION

	Mother/Guardian	**Father/Guardian**
Name:		
Home Address:		
City/State/Zip:		
Home Telephone:		
Cell Telephone:		
Pager Number:		

PARENT(S)/GUARDIAN(S) WORK INFORMATION

Mother/ Guardian Employer:	
Work Telephone:	
Work Address:	
City/State/Zip:	
Father/ Guardian Employer:	
Work Telephone:	
Work Address:	

City/State/Zip:	
SPECIAL INSTRUCTIONS TO CONTACT PARENTS:	

OTHER EMERGENCY CONTACT INFORMATION

In case of illness or other emergency, give the name, address and telephone number of nearest relative or friend who can be contacted if the parents cannot be reached.

Name:	
Relationship to Child:	☐**Grandparent** ☐**Aunt/Uncle** ☐**Sister/Brother** ☐**Friend**
Address: **(Include Number and Street Name)**	
City/State/Zip:	
Telephone:	
CHILD'S PEDIATRICIAN OR SOURCE OF HEALTH CARE	
Name of Physician:	
Telephone:	
Address: **(Include Number and Street Name)**	
City/State/Zip:	

MEDICAL EMERGENCY STATEMENT

I hereby give _____(Name of Family Day Care Provider) permission to take my child, _____, to a hospital for medical treatment when I cannot be reached.

_____ _____

Parent Signature **Date Signed**

Note: Many emergency services personnel often require notarized authorization in order to proceed with care. Please request from your provider and complete a **MEDICAL CARE AND EMERGENCY CONTACT INFORMATION** form in order to provide this detailed information.

PERMISSION TO TAKE THE CHILD OFF THE PREMISES

I hereby give _____(Name of Family Child Care Provider) permission to take my child, _____, on excursions from the family day care home that might include the following types of activities:

(The provider should fill in the above list with activities that she might provide away from home. Examples might include trips to the store, riding in the car, swimming, etc.)

Parent/Guardian ***Date*** ***Date***

CHILD'S SCHEDULE AND INTERESTS

The following information will assist the provider to understand and care for your child.

Please describe your child's eating habits, i.e. food likes and dislikes, etc.
NOTE: Complete **INFANT FEEDING PLAN** for children who are under 1 year of age.

Describe the play activities that your child likes, both indoors and out-of-doors.

Describe your child's naptime habits.

Describe your child's toilet and hygiene habits.

Please add any other special information that is important to your child's care here:

Does your child have any known allergies? ☐ Yes ☐ No If yes, please explain:

Does your child have any known medical problems? ☐ Yes ☐ No If yes, please explain:

Please read the statement below and initial the box to the left if you have provided this information.

☐ My child has known allergies and/or other medical problems. I have requested from my provider and completed a **MEDICAL CARE AND EMERGENCY CONTACT INFORMATION** form in order to provide this detailed information.

Parent/Guardian ***Date***

FDCH Provider:_____ Address:_____

Level:_____(i.e. Main, Upper, Lower- Please complete plan for each level of home used for child care including cooking and toileting areas)

Provider Signature: _____ Date:_____ Consultant Signature:_____ Date: _____